User Guide

NCR RealPOS XR5 (7701)

Release 1.1

B005-0000-2427
Issue G

The product described in this document is a licensed product of NCR Corporation.

NCR is a registered trademark of NCR Corporation. NCR RealPOS is a trademark of NCR Corporation in the United States and/or other countries. Other product names mentioned in this publication may be trademarks or registered trademarks of their respective companies and are hereby acknowledged.

The terms HDMI and HDMI High-Definition Multimedia Interface, and the HDMI Logo are trademarks or registered trademarks of HDMI Licensing LLC in the United States and other countries.

Where creation of derivative works, modifications or copies of this NCR copyrighted documentation is permitted under the terms and conditions of an agreement you have with NCR, NCR's copyright notice must be included.

It is the policy of NCR Corporation (NCR) to improve products as new technology, components, software, and firmware become available. NCR, therefore, reserves the right to change specifications without prior notice.

All features, functions, and operations described herein may not be marketed by NCR in all parts of the world. In some instances, photographs are of equipment prototypes. Therefore, before using this document, consult with your NCR representative or NCR office for information that is applicable and current.

To maintain the quality of our publications, we need your comments on the accuracy, clarity, organization, and value of this book. Please use the link below to send your comments.

EMail: FD230036@ncr.com

Copyright © 2015–2018
By NCR Corporation
Atlanta, GA U.S.A.
All Rights Reserved

Preface

Audience

This book is written for hardware installer/service personnel, system integrators, and field engineers.

Notice: This document is NCR proprietary information and is not to be disclosed or reproduced without consent.

Safety Requirements

The *NCR RealPOS XR5* conforms to all applicable legal requirements. To view the compliance statements see the *NCR RealPOS Terminals Safety and Regulatory Statements* (B005-0000-1589).

Caution: The on/off switch is a logic switch only. The AC line voltage primaries are live at all times when the power cord is connected. Therefore, disconnect the AC power cord before opening the unit to install features or service this terminal.

Lithium Battery Warning

Warning: Danger of explosion if battery is incorrectly replaced. Replace only with the same or equivalent type as recommended by the manufacturer. Discard used batteries according to the manufacturer's instructions.

Attention: Il y a danger d'explosion s'il y a remplacement incorrect de la batterie. Remplacer uniquement avec une batterie du même type ou d'un type recommandé par le constructeur. Mettre au rébut les batteries usagées conformément aux instructions du fabricant.

Battery Disposal (Switzerland)

Refer to Annex 4.10 of SR814.013 for battery disposal.

IT Power System

This product is suitable for connection to an IT power system with a phase-to-phase voltage not exceeding 240 V.

Peripheral Usage

This terminal should only be used with peripheral devices that are certified by the appropriate safety agency for the country of installation (UL, CSA, TUV, VDE) or those which are recommended by NCR Corporation.

Warning: DO NOT connect or disconnect the transaction printer while the terminal is connected to AC power. This can result in system or printer damage.

Warning: DO NOT connect or disconnect any serial peripherals while the terminal is connected to AC power. This can result in system or printer damage.

Grounding Instructions

In the event of a malfunction or breakdown, grounding provides a path of least resistance for electric current to reduce the risk of electric shock. This product is equipped with an electric cord having an equipment-grounding conductor and a grounding plug. The plug must be plugged into a matching outlet that is properly installed and grounded in accordance with all local codes and ordinances. Do not modify the plug provided – if it will not fit the outlet, have the proper outlet installed by a qualified electrician. Improper connection of the equipment-grounding conductor can result in a risk of electric shock.

The conductor with insulation having an outer surface that is green with or without yellow stripes is the equipment-grounding conductor.

If repair or replacement of the electric cord or plug is necessary, do not connect the equipment-grounding conductor to a live terminal. Check with a qualified electrician or service personnel if the grounding instructions are not completely understood, or if you are in doubt as to whether the product is properly grounded.

Use only 3-wire extension cords that have 3-prong grounding plugs and 3-pole receptacles that accept the product's plug. **Repair or replace damaged or worn cords immediately.**

References

- *NCR RealPOS XR5 User Guide* (B005-0000-2427)
- *NCR RealPOS XR5 Site Preparation Guide* (B005-0000-2408)
- *NCR RealPOS XR5 Hardware Service Manual* (B005-0000-2428)
- *NCR RealPOS XR5 Parts Identification Manual* (B005-0000-2429)
- *NCR RealPOS XR5 Power Matrix* (B005-0000-2430)
- *NCR RealPOS XR5 Master HTML* (B005-0000-2442)

Table of Contents

Chapter 1: Product Overview

Introduction 1
Product IDs 1
Mounting Configurations 2
15-Inch (4:3) Display w/ MSR 2
7701-F031 Integrated Stand (w/ Power Brick Compartment) or 2
7701-F032 P–Series Stand 2
7701-F033 XL Stand 2
Wall Mount (F320/F322) 3
VESA Mount Pattern 3
Operator Controls 4
Power Switch 4
Power LED 5
I/O Panel LED Diagnostic Indicators 6
Label Locations 7
Features 8
Optional Features 9
Operating Systems 11
Specifications 13
Motherboard 13
Power Supply 13
Operator Display 14
Integrated Stand (F031) 15
P-Series Stand (F032) 15
XL Stand (F033) 16
Magnetic Stripe Reader (F141/F142/F143) 17
Data Encryption 17
Card Data Encoding 18
Card Thickness 18
Biometrics (F151) 19
Wireless Adapter (F153) 20
Wireless Adapter Switching 21

Operator Camera (F156) 22
Key Features 22
HSR RJ12 Expansion (F160) 23
Key Features 23
3-Port Serial Expansion (F161) 25
Features 25
Side Mount Imager (F170) 27
Side Mount UV Bill Validator (F171) 27
Customer Displays 28
2x20 Customer Display on the POS Stand (F450) 28
2x20 Customer Display on the Extension Arm (F451/F457) 28
10.4-Inch Integrated Non-touch (F452) or PCAP (F459) or Resistive Touch (F461) LCD Customer Display on the POS Stand 29
10.4-Inch Customer Display on the Extension Arm (F453/F458) 29
Graphical VFD Customer Display (F454) 30
High Mount 2x20 Customer Display (F460) 30
2x20 Adjustable High Mount Display (F490) 31
2x20 (F550) or Graphical VFD (F554) Customer Display on the XL Stand 31
10.4-inch Integrated Non-touch (F552) or PCAP(F559) LCD Customer Display on the XL Stand 32
Odometers 33

Chapter 2: Hardware Installation

Installation Restrictions 35
Installing Third Party VESA Mounts 36
Mounting Screw Length 37
Ergonomic Workplace 38
Installing the Terminal 39
Connecting the Peripheral Cables 39
Cable Routing 41
Connecting AC Power 43
Troubleshooting: Terminal Unresponsive After Connecting AC Power ..43
Power Supply Bracket 44
Disconnecting the Power Cable 44
Installing a Transaction Printer 45
Installing a Cash Drawer 46
Second Cash Drawer Cable Connection 47
Wireless Antenna 48

Installing the Dipole Antenna 48

Chapter 3: Operation and Cleaning

Out-Of-Box Powering Up 49
Administrator Login 49
Brightness Adjustment 50
Brightness Control Application 50
RSM LE Interface 51
Touch Screens 52
Projected Capacitive Touch Screen 52
Using the PCap Touch Screen 52
Magnetic Stripe Reader 53
Card Thickness 53
Using the MSR 53
Care of Cards 53
MSR Cleaning Procedures 54
MSR Cleaning and Treatment Cards 54
MSR Treatment Card 54
Cleaning/Treatment Frequency 55
Biometrics Fingerprint Reader 56
Sensor Cleaning Procedures 56
Daily Cleaning 56
Using the Biometrics Reader 56
Software Drivers 57
Cabinet Cleaning Procedures 58
Cleaning the Cooling Vents 58

Chapter 4: Disk Image Backup and Recovery Tool

Introduction 59
Running the Recovery Tool 60
Starting the Recovery Tool 60
Main Screen 61
Check and Repair Disk 61
Save or Load Image 61
Change Settings 61
Shutdown or Reboot 61
System Information 61

Save Or Load Image 62
Saving An Image 63
Loading An Image 66
Change Settings 71
Change Network Settings 72
Change Password 73
Replace Recovery Image 74
Change Language 75
Creating a Disk Image 76

Chapter 5: Power Management

Computer States 77
G3 Mechanical Off 77
G2/S5 Soft Off 77
G1 Sleeping 77
G0 Working 78
ACPI Sleep States (S0 - S5) 78
Requirements for S3 support: 78
Requirements for S4 support: 79
Enabling Wake on LAN 81
Windows 7 81
ACPI Processor C-States 84

Chapter 6: BIOS Setup

Entering Setup 85
How to Select Menu Options 85
Restoring Factory Settings 85
BIOS Default Settings 86
Main Menu 86
Advanced Menu 86
Chipset Menu 94
Boot Menu 99
Security Menu 100

Chapter 7: BIOS Updating Procedure

Introduction 101
Prerequisites 101
Creating a Bootable USB Memory Drive 102

SPI/BIOS Updating Procedures 103

Chapter 8: Initial Terminal Imaging

Introduction 107
Imaging Procedure 107

Chapter 9: 2x20 Customer Display Interface

Host/Retail Display Command Interface 109
- Character Scrolling Rate 109
- Set Screen Save Blank 109
- Set Screen Save Walk 110
- Turn On Screen Save 110
- Disable Screen Save Option 110
- Enable Character Blink 111
- Disable Character Blink 111
- Move Cursor Left 111
- Move Cursor Right 112
- Move Cursor Up 112
- Move Cursor Down 112

Retail Display Commands 113
- Move Cursor To Specified Position 115
- Brightness Adjustment 116
- Read Display ID Byte 116
- Read Display ID String 117
- Display ESC Character 117
- Select Character Set n 117

Character Sets 118
- Code Page 858 (International) 119
- Code Page Katakana 127
- Code Page 866 (Cyrillic) 135
- Reset Display 143
- Erase Display 143
- Set Diagnostic State On 144
- Set Display State On 144
- Set Low Power State On 145
- Enable Cursor 146
- Disable Cursor 147

Chapter 10: Graphical VFD Customer Display Interface

Host/Retail Display Command Interface 149
Retail Display Commands 150
Backspace 151
Horizontal Tab 151
Line Feed 151
Home 151
Clear Display 151
Carriage Return 152
Enable/Disable Cursor 152
Initialize Display 152
Set Font Size 153
Enable/Disable Double Byte Character Mode 154
Double Byte Code Page Select 155
Single Byte International Code Page Select 156
Single Byte Code Page Select 157
Vertical Scroll 157
Horizontal Scroll 158
Overwrite Mode 158
Brightness Level Adjustment 159
Character Sets 160
Single Byte Character Sets 160
Double Byte Character Sets 160
Code Pages 160

Appendix A: Wireless Adapter Switching

Installing the Software and Driver 162

Appendix B: Touch Screen Calibration

Proper Touch Screen Methods 169
Calibrating the Touch Screen 171
Resistive Touch Screen Calibration 171
PCap Touch Screen Calibration 172

Appendix C: Touchscreen Drivers

Touchbase Driver 173
When the Touch Base Driver is Required 173
Driver Installation 173

3rd Party Touch 173
UPDD 173
UPDD Settings 174
Install eGlax Driver 174

Revision Record

Issue	Date	Remarks
A	Sep 2015	First Issue
B	Mar 2017	Release 1.1 • Added Graphical VFD Customer Display (F454) • Added new chapter: *Graphical VFD Customer Display Interface*
C	Apr 2017	1. Added table of features and optional features 2. Updated table of Operating Systems 3. Added the following features: • P-Series Stand (F032) • Side Mount Imager (F170) • Side Mount UV Bill Validator (F171) • 240GB SSD (F247) • High Mount 2x20 Customer Display (F460)
D	June 2017	Added XL Stand (F033) and 10.4" Resistive Touch Customer Display (F461)
E	Oct 2017	Added IO Panel LED
F	Jan 2018	Added Troubleshooting: Terminal Unresponsive After Connecting AC Power
G	Mar 2018	Added F490, F550, F552, F554, F559, F787, F788 Removed F785, F786

Chapter 1: Product Overview

Introduction

The NCR RealPOS XR5 (also known as NCR 7701) features stylish all-in-one design, best-in-class performance, exceptional versatility, plus the ruggedness and data security you need for mission-critical store environments. The NCR RealPOS XR5 supports the latest POS applications for to help you service your customers quickly and efficiently. Additionally, it provides multi-touch and gesture support to make it easy for users to interact in a way that is most familiar to them in their everyday lives. And, it all fits in a small footprint that helps conserve valuable space at the counter.

The flexible XR5 platform makes it an ideal choice for use as either a POS or a kiosk. Place it on a tabletop, kiosk pedestal, or even hang it on a wall or a pole. You can also customize your solution with integrated options including an encrypted magnetic stripe reader (MSR), fingerprint reader, camera, wireless module and a family of customer facing displays. To complete your POS solution, choose from NCR's extensive line of peripherals, including printers, displays, keyboards and scanners. Powered peripheral ports simplify cable management and reduce potential points of failure.

Product IDs

Major Model	CPU
7701-1215	15" PCAP, Intel® Celeron™ Quad Core, No Memory, No HDD

Note: Storage devices, memory, power supply are ordered as features.

Mounting Configurations

15-Inch (4:3) Display w/ MSR

7701-F031 Integrated Stand (w/ Power Brick Compartment) or

7701-F032 P–Series Stand

7701-F033 XL Stand

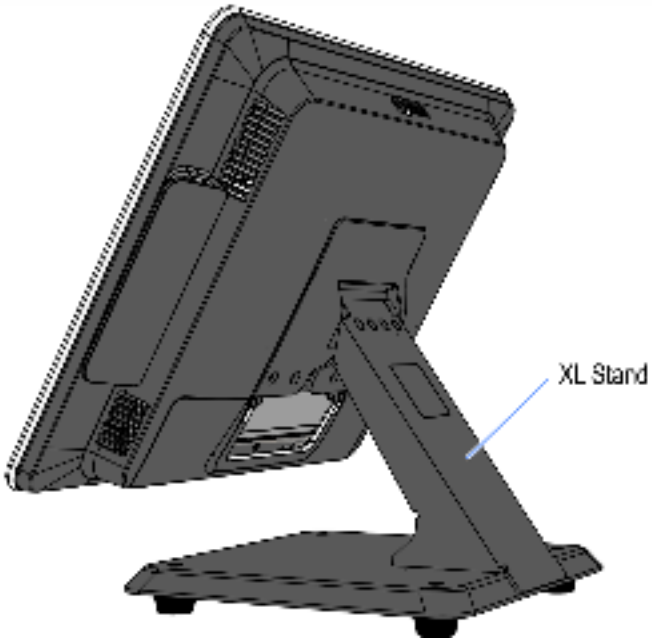

Wall Mount (F320/F322)

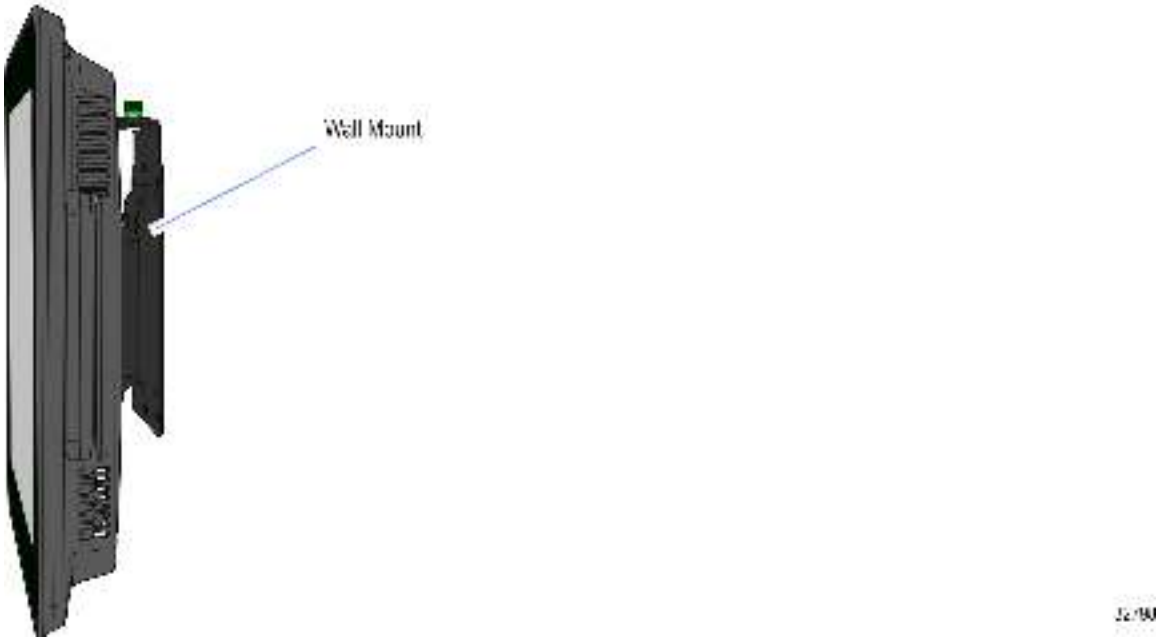

VESA Mount Pattern

The Back Cabinet has a VESA Pattern to accommodate Third-Party Mounts. A VESA Mount Spacer (7702-K321) is available for when the VESA mount is larger than the inset in the Back Cabinet, which provides a flat surface for the mount.

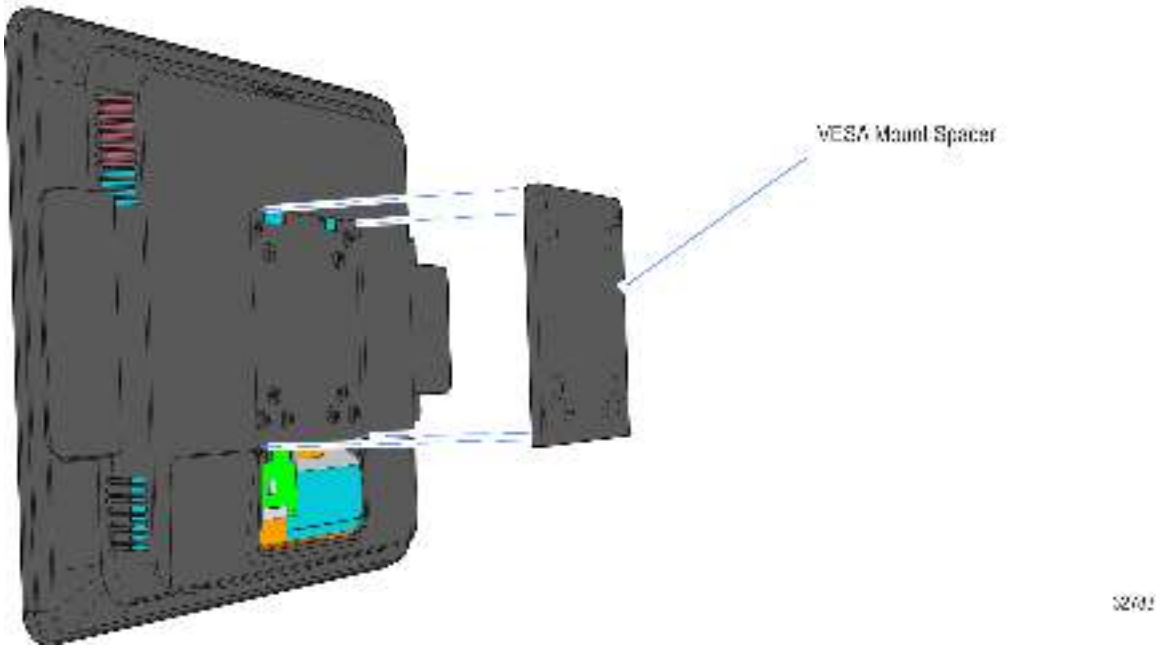

Operator Controls

Power Switch

The Power Switch is located behind the Cable Cover.

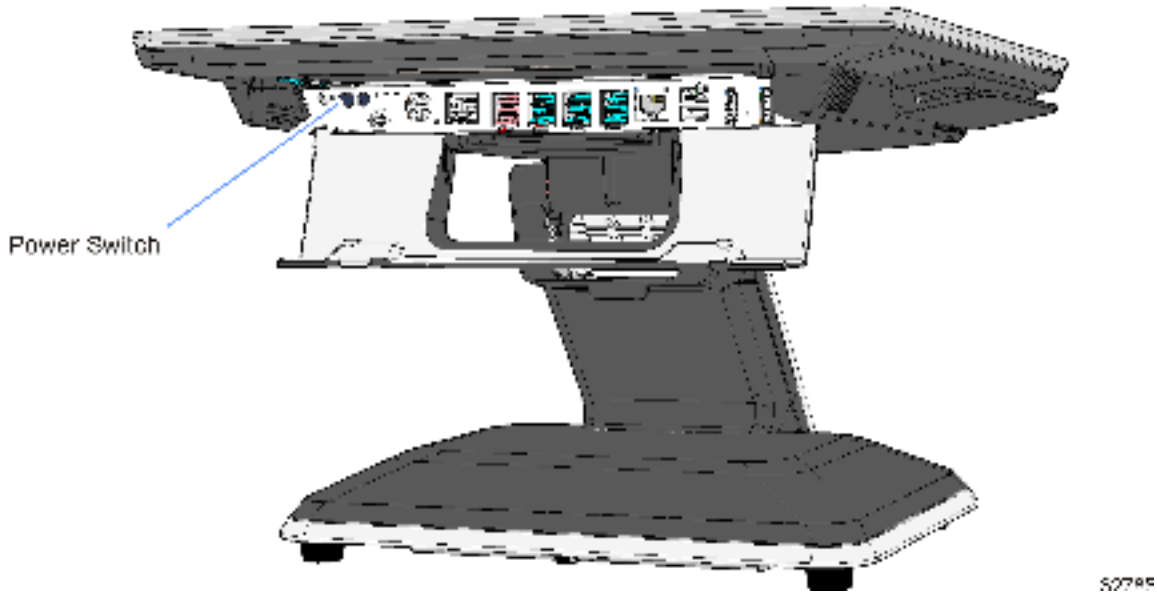

Power LED

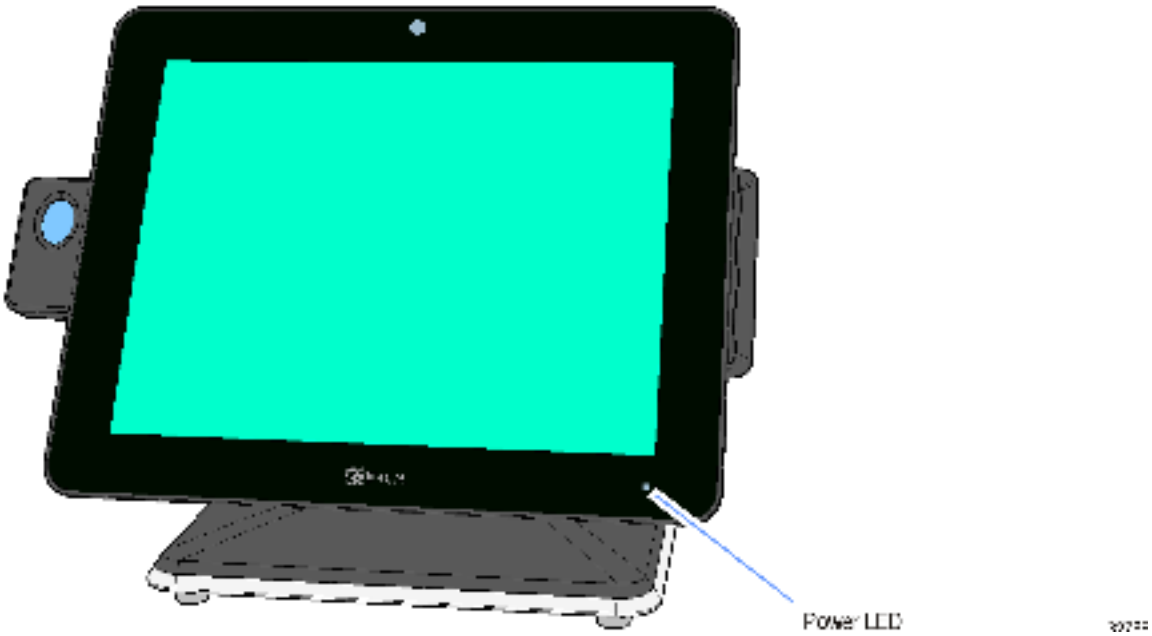

The Front Panel Power LED has multiple functions as defined below.

Color	Description
Black	System OFF or No power
Blue	System ON
Yellow	System in Sleep Mode
Green (1 sec.)	Successful MSR swipe or Biometric read
Red (1 sec.)	Unsuccessful MSR swipe or Biometric read

I/O Panel LED Diagnostic Indicators

There are three Status LEDs located on the I/O Panel.

LED	Color	Description
HDD	Green - Solid/Blinking	Indicates HDD activity
Power	Black	No power
	Orange	S5 Standby
	Green	Power On
Stat	Black	System Off, or BIOS cannot load
	Red	BIOS loaded, executing POST
	Red (Blinking)	BIOS Error, POST halted
	Green	BIOS POST completed, OS loading
	Green (Blinking)	OS & NCR Drivers loaded and running
	Green/OFF (Continuous)	System locked

Label Locations

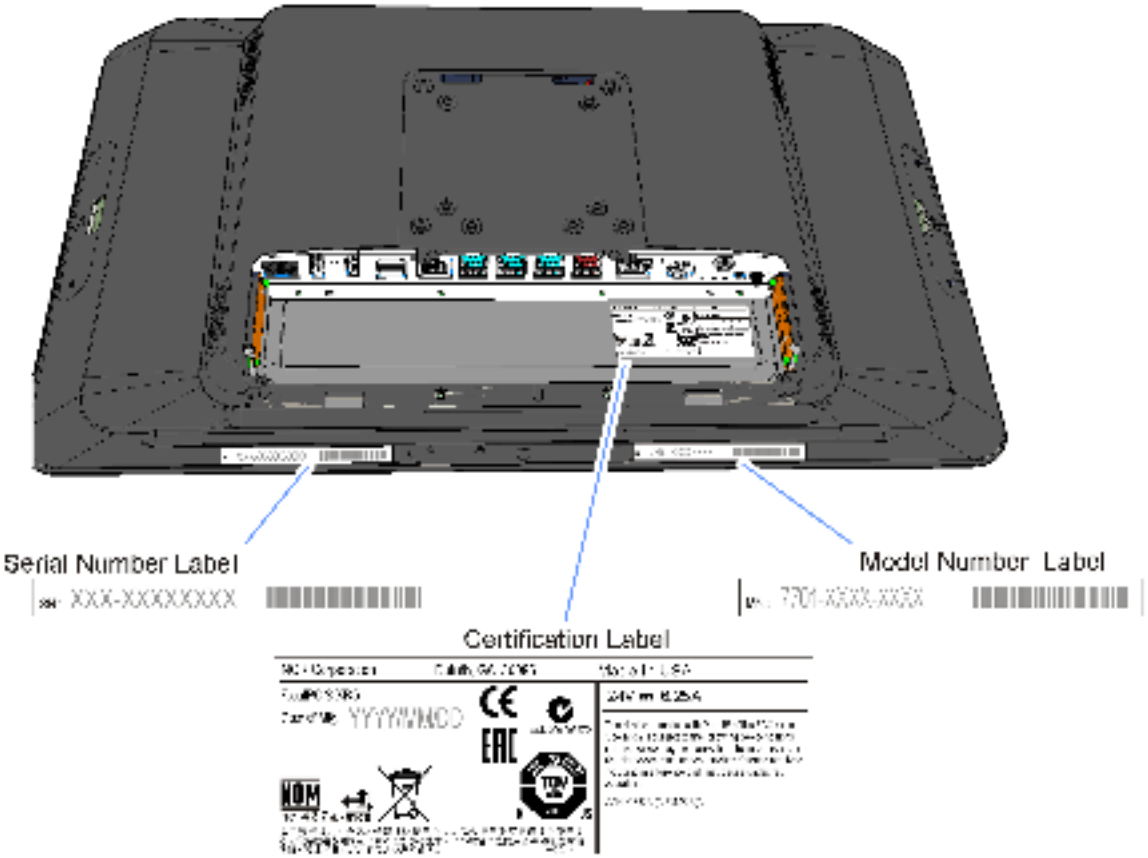

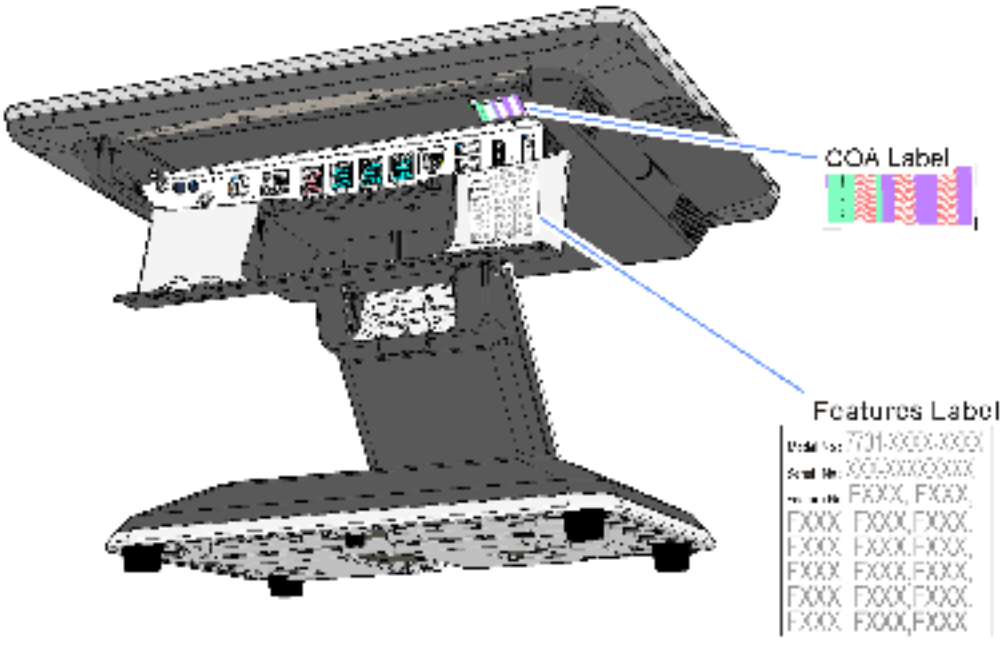

Features

Feature		Description
Display	F015	15" AUO RGB LCD, PCAP Touch
Motherboard	F210	Intel® Braswell SoC Chipset with Intel® Celeron™ N3160 Processor
Power Supply	F120	150 watts external power supply
Memory	F134	4GB, 1600MHz DDR3L-1600, 512Mx64 SODIMM
	F136	8GB, 1600MHz DDR3L-1600, 512Mx64 SODIMM
Storage Media	F243	120GB Solid State Drive
	F247	240GB Solid State Drive
	F260	500GB Hard Disk Drive
Port A Features	F141	NCR Encrypted MSR
	F142	JIS MSR
	F143	Monetra Encrypted MSR
Port B Features	F151	Biometric Fingerprint Reader
	F153	Wireless Card and Antenna – 802.11 Bluetooth
	F170	Imager
	F171	UV Bill Validator
Camera	F156	Operator Camera

Optional Features

Optional Feature		Description
Expansion	F160	6–Port Serial I/O Expansion
	F161	3–Port I/O Expansion
	F163	No I/O Expansion with High Mount 2x20
Ethernet Cable	F110	7701 10/100/1000 Ethernet Cable
Power Cord	F100	US Power Cord
	F101	International Power Cord
	F102	UK Power Cord
	F103	Australia Power Cord
	F104	China Power Cord
	F105	SEV Power Cord
	F106	India Power Cord
	F108	Argentina Power Cord
	F109	Power Cord 120V Twist Lock
Miscellaneous	F111	Serial Converter Cable
Wall Mount	F320	Wall Mount Bracket, POS Display
	F322	Wall Mount Bracket, Serial Expansion
Stand	F031	Integrated Stand
	F032	P–Series Stand
	F033	XL Stand

Optional Feature		Description
Customer Display	F450	2x20 Customer Display with Stand Mount Bracket and Cable
	F451	2x20 Customer Display integrated on extension with XR stand with swivel mount
	F452	10–inch Integrated non-touch LCD
	F453	Integrated extension stand with tilt mount for LCDs on XR Stand
	F454	Graphical VFD Customer Display
	F455	No Customer Display Option with XR Stand
	F456	No Customer Display Option with P1535 Stand
	F457	2x20 Customer Display integrated on extension with P–Series stand with swivel mount
	F458	Integrated extension stand with tilt mount for LCDs on P–Series Stand
	F459	10–inch Integrated PCAP LCD
	F460	High Mount 2x20 Customer Display
	F461	10–inch Integrated Resistive Touch LCD
	F490	2x20 Adjustable High Mount Display
	F550	2x20 Customer Display for XL Stand (F033/K033)
	F552	10–inch Integrated non-touch LCD for XL Stand (F033/K033)
	F554	Graphical VFD Customer Display for XL Stand (F033/K033)
	F559	10–inch Integrated PCAP LCD for XL Stand (F033/K033)

Operating Systems

The OS image and base platform drivers will be preloaded on the hard disk or solid state disk prior to shipment. System must be configured with hard disk or solid state drive. OS images do not include OPOS driver software for retail peripherals. Windows OPOS drivers are installed using NCR Retail Platform Software for Windows. RPSW Platform software may be ordered on CD-ROM or is downloadable from the NCR Drivers & Patches website.

Product ID	Product ID Description	Configuration Notes
7701–F712	Windows 10 IoT Enterprise 2016 LTSB Entry (32 bit) Embedded Operating System	Windows 10 IoT Enterprise 2016 LTSB Entry Embedded Operating System will be pre-installed in the factory. Recovery: D370-1062-0100
7701–F713	Windows 10 IoT Enterprise 2016 LTSB Entry (64 bit) (Legacy BIOS) Embedded Operating System	Windows 10 IoT Enterprise 2016 LTSB Entry Embedded Operating System will be pre-installed in the factory. Recovery: D370-1063-0100
7701–F715	Windows 10 IoT Enterprise 2016 LTSB Entry (64 bit) (UEFI BIOS) Embedded Operating System	Windows 10 IoT Enterprise 2016 LTSB Entry Embedded Operating System will be pre-installed in the factory. Recovery: D370-1063-0100
7701-F787	Windows 7 Professional (32 bit) Embedded Operating System	Windows 7 Professional (32 bit) Embedded Operating System will be pre-installed at the factory. Recovery: D370-1053-0100
7701-F788	Windows 7 Professional (64 bit) Embedded Operating System	Windows 7 Professional (64 bit) Embedded Operating System will be pre-installed at the factory. Recovery: D370-1054-0100
7701–F790	Windows Embedded POSReady 7 (32 bit) for Embedded Systems	POSReady 7 (32 bit) Embedded Operating System will be preloaded at the factory. Recovery: D370-1027-0100
7701–F791	Windows Embedded POSReady 7 (64 bit) for Embedded Systems	POSReady 7 (64 bit) Embedded Operating System will be preloaded at the factory. Recovery: D370-1028-0100

Product ID	Product ID Description	Configuration Notes
D370–0924–0100	RPSW 4.2.0.0 or higher – Windows 32 bit	Includes NCR peripheral support using Unified POS standards for OPOS and JavaPOS for POSReady 7 (32 bit) and Windows 7 (32 bit) operating systems.
D370–0986–0100	RPSW 5.2.0.0 or higher – Windows 64 bit	Includes NCR peripheral support using Unified POS standards for OPOS and JavaPOS for POSReady 7 (64 bit) and Windows 7 (64 bit) operating systems.

Base client and third-party software are also available on the public NCR Platform Software Website:

http://www.ncr.com/support/support_drivers_patches.asp?Class=External\display

Specifications

Motherboard

Feature	Specifications
Chipset	Intel® Braswell SoC Chipset
Processor	Intel® Celeron™ N3160 Processor
Memory	4GB up to 8GB, DDR3 1333/1600
Storage Media	2 Serial ATA interfaces (SATA) for HDD or SSD
Network	High-speed 10/100/1000Mb Ethernet
Serial Port	• (1) Serial port (RJ50)
USB Port	• (2) Standard USB 3.0 (5V) • (1) USB+Power (24V printer) • (3) USB+Power (12V) **Note:** For security purposes individual USB ports can be disabled in the BIOS at: **Chipset** >> **PCH-IO Configuration** >> **USB Configuration** >> **USB Ports Per-Port Disable Control** >> **Enabled**.
Cash Drawer Port	Dual cash drawer support from one connector using Y-cable (12V or 24V)
HDMI Port	• (1) High Definition Port (Digital Video/Audio)
Display Port	• (1) Display Port (Digital Video/Audio)
Power Input Port	DC Power Jack for 24V Power Brick

Power Supply

- 150W Output power
- Switching Power Supply, External 24V Adapter
- MEPS Level V mark (efficiency 87% minimum), Energy Star 5.0 capable
- Supports 24V retail printers at 55W maximum when connected to 7701

Operator Display

Display	Contrast Ratio	Viewing Angle	Color Palette	Native Resolution	Pixel Pitch	Brightness
15"	Typical: 700:1	Left/Right: 80°/80° Up/Down: 70°/80°	16.2 M	1024 x 768	297x297 um	500 nits

Integrated Stand (F031)

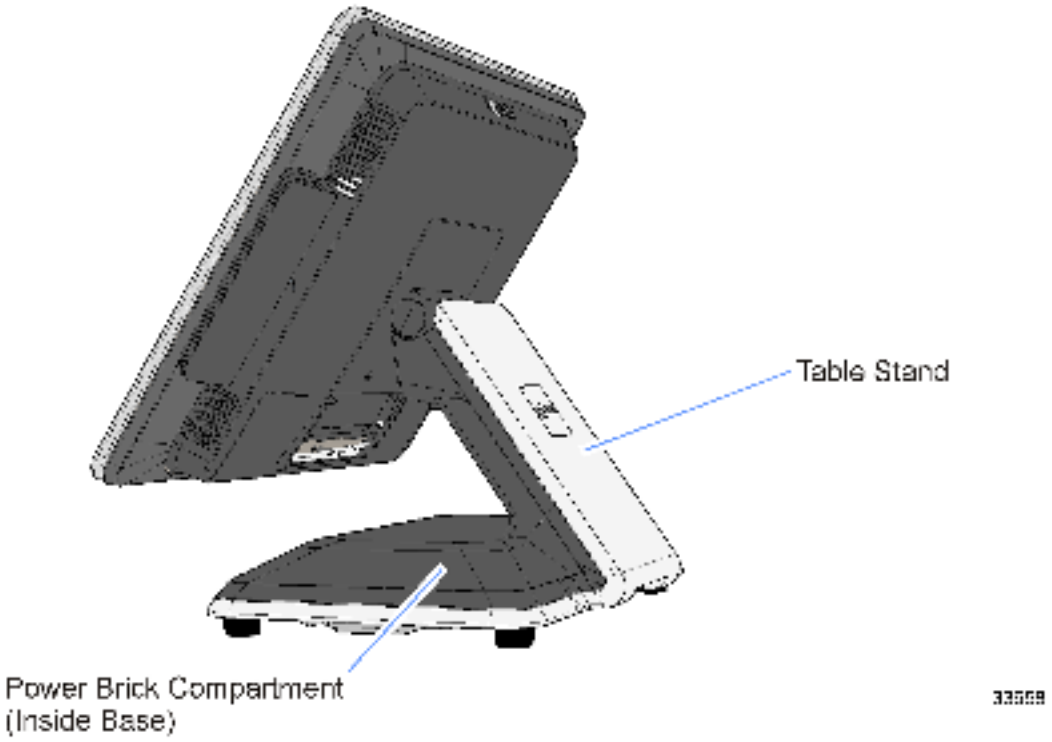

P-Series Stand (F032)

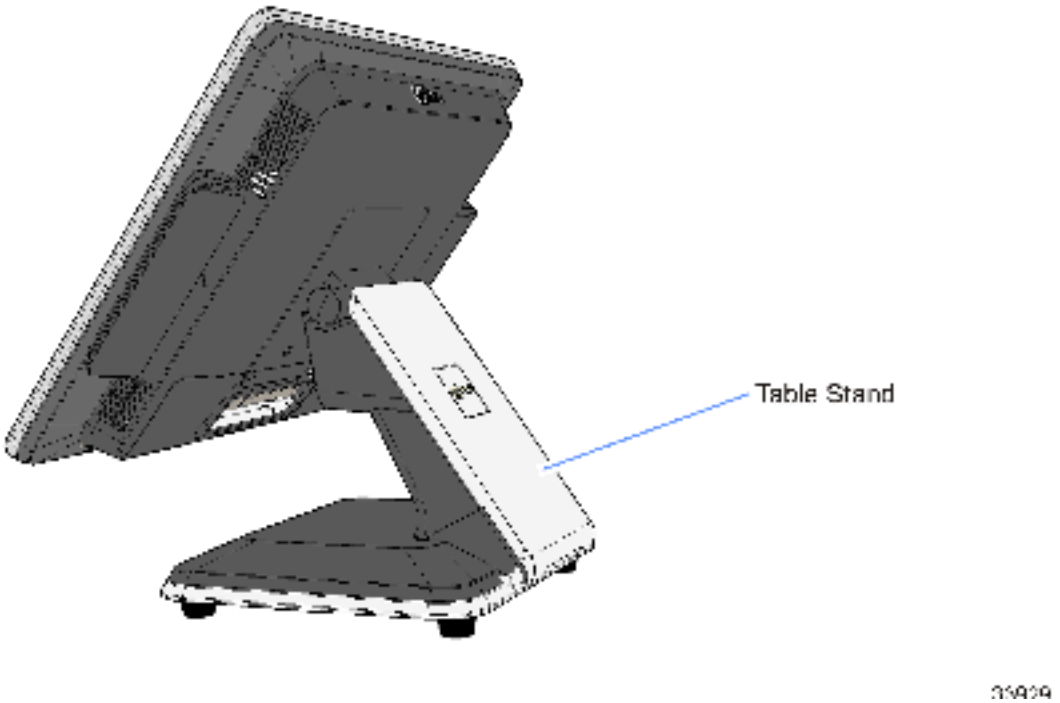

XL Stand (F033)

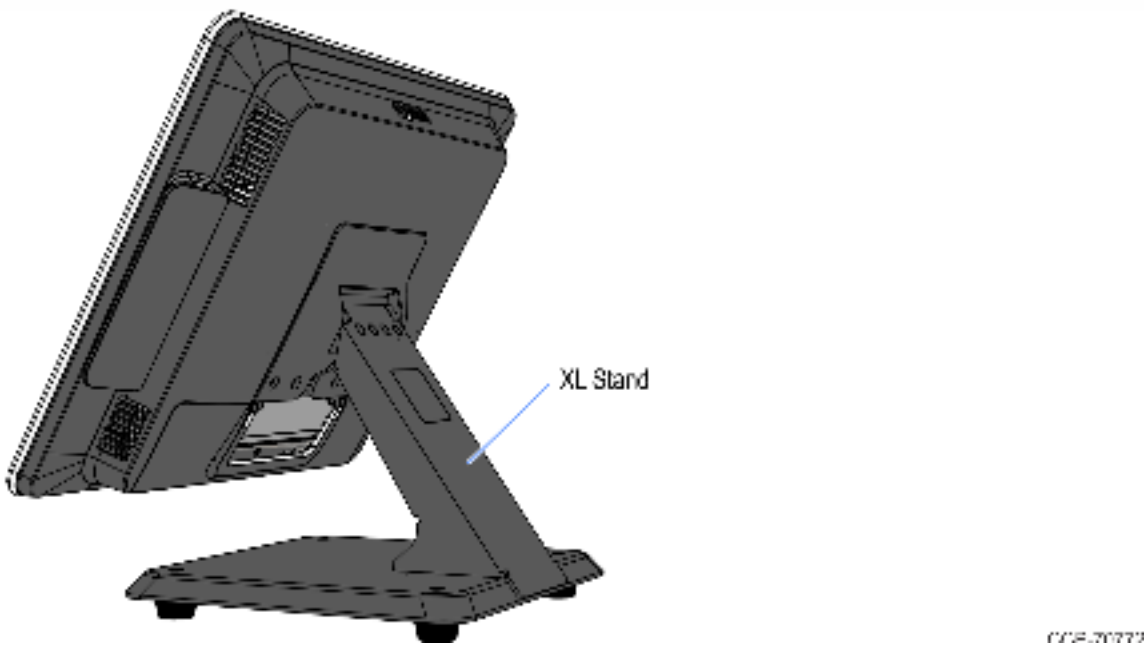

Magnetic Stripe Reader (F141/F142/F143)

Data Encryption

There are three types of MSR heads available for the XR5.

- NCR Encrypted MSR (7701-F141) — Software interfaces: OPOS, Serial, NCR API or Keyboard Wedge

Note: If you need assistance with Keyboard Wedge configuration please send an email request from the following location:

http://www5.ncr.com/support/support_drivers_patches.asp?Class=External/Terminals\7701XR5\display

Click the Email Us! icon under NCR RealPOS XR5 (7701-1xxx)

- NCR JIS MSR (7701-F142) — Dual head for Japan use
- Monetra Encrypted MSR (7701-F143) — Software interfaces: OPOS or NCR API

NCR Encrypted MSR (F141)

The NCR Encrypted MSR head encrypts card data on the head using a Triple DES DUKPT encryption scheme. The data is encrypted using the 3DES standard. A unique 3DES key is generated for every transaction (no two swipes are encrypted with the same 3DES key). The data is decrypted before it is sent to the application.

Monetra Encrypted MSR (F143)

This MSR is for use with the Monetra credit processing, which is a Point-to-Point Encryption (P2PE). There is no data decryption performed at the terminal but instead is passed on to Monetra for processing.

The Monetra®payment processing software securely links point of sale, e-commerce, and other applications directly to all major transaction processors for performing credit, debit, EBT, gift card and check transactions. Card data is never decrypted on terminal and masked data is available in the *unencrypted* track data. Only financial cards are encrypted in this way and loyalty/manager/ID cards are returned fully clear.

Card Data Encoding

Card data should be encoded according to the ISO Standards 7810, 7811 and 7813. In particular, 7810 describes the physical dimensions and layout of the card and mag stripe. 7811-4, 5 and 6 relate to the locations and magnetic characteristics of track data in the mag stripe. 7813 is specific to financial cards (credit and debit).

- Track 1 data is 7-bit encoded, alphanumeric and a maximum of 79 characters.
- Track 2 data is 5-bit encoded, numeric only and a maximum of 40 characters.
- Track 3 data is 5-bit encoded, numeric only and a maximum of 107 characters.

See the ISO Standards specifications for more detail.

Card Thickness

The MSR module accepts standard cards within the thickness range of 0.68 – 0.84 mm.

Biometrics (F151)

The Biometrics module is mounted on the left side of the operator display. The Biometrics module interfaces to the system via a USB connection in the display head.

Note: Wireless and Biometrics are mutually exclusive features.

Wireless Adapter (F153)

Note: Wireless and Biometrics are mutually exclusive features.

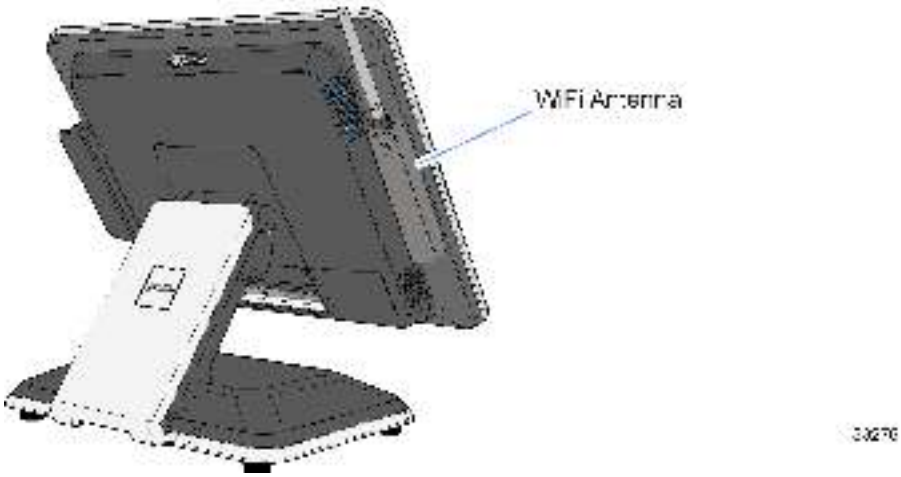

Wi-Fi Alliance	Wi-Fi CERTIFIED* for 802.11a, 802.11b, 802.11g, 802.11n, WMM*, WPA*, WPA2*, and WPS Wi-Fi Direct for peer to peer device connections
Microsoft WHQL	Yes
IEEE WLAN Standard	IEEE 802.11a/b/g/n, 802.11d, 802.11e, 802.11i, 802.11h
Architecture	Infrastructure and SoftAP; Supports simultaneous Client and SoftAP modes in 2.4 GHz or 5 GHz
Roaming	9 Supports seamless roaming between respective access points (802.11b, 802.11g, 802.11a/b/g, and 802.11a/b/g/n)
Bluetooth	Dual Mode Bluetooth* 2.1, 2.1+EDR, 3.0, 3.0+HS, 4.0 (BLE)
Security10	
Authentication	WPA and WPA2, 802.1X (EAP-TLS, TTLS, PEAP, LEAP, EAP-FAST), EAP-SIM, EAP-AKA
Authentication Protocols	PAP, CHAP, TLS, GTC, MS-CHAP*, MS-CHAPv2
Encryption	64-bit and 128-bit WEP, AES-CCMP, TKIP
Wi-Fi Direct* Encryption and Authentication	WPA2, AES-CCMP

Product Safety	UL, C-UL, CB (IEC 60950-1)
Compliance	
Retail (Credit Card Processing)	PCI, CISP
Government	FIPS11 ,FISMA

Wireless Adapter Switching

Wireless Adapter Switching is a feature that disables the wireless adapter when a wired Ethernet connection is present. See the *Wireless Adapter Switching* chapter for instructions about how to install it.

Operator Camera (F156)

An integrated USB camera can be configured on the front of the display.

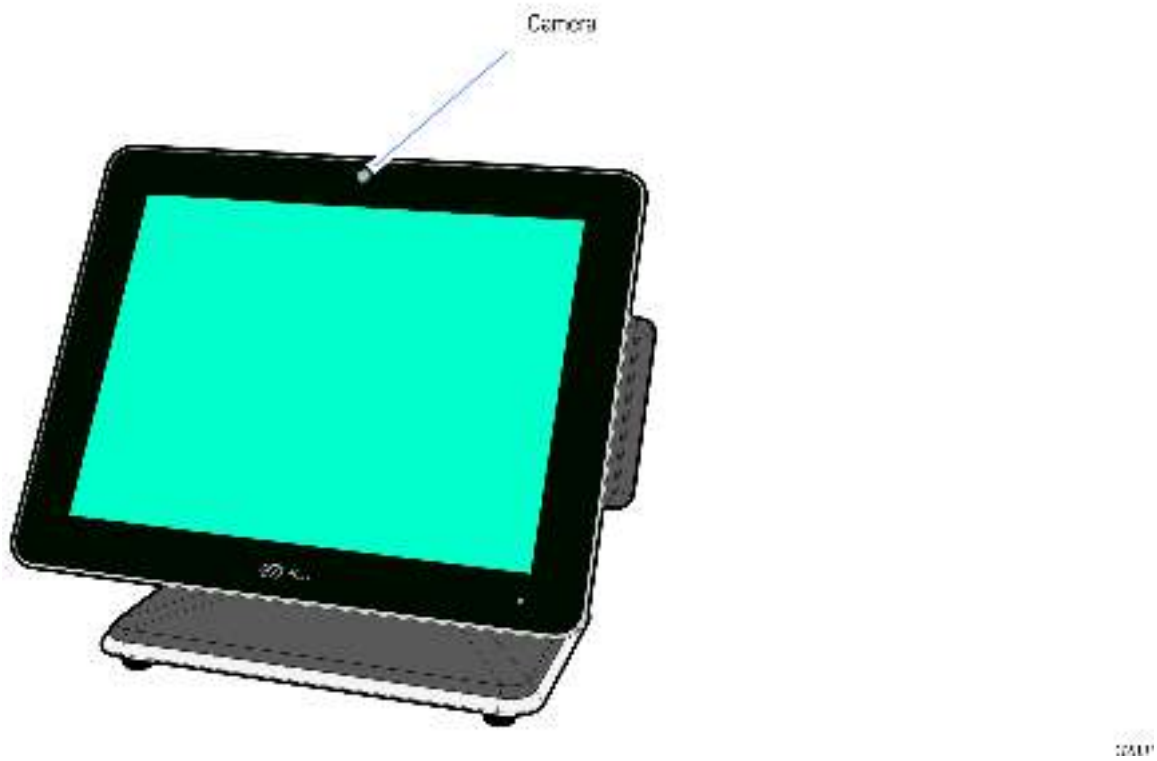

The camera module is a high speed USB 2.0 compliant webcam for Laptops. The supported image resolution is 1920 x 1080 FHD (2.0M) size utilizing a CMOS image sensor. The USB module integrates a USB 2.0 controller, color-processing engine and a high quality imager to provide up to 30 fps at FHD (1920x1080) size in high speed mode.

Key Features

- Automatic Exposure Control (AE)
- Automatic White Balance Control (AWB)
- Automatic Gain Control (AGC)
- Image Quality Control (Brightness, Saturation, Hue, Gamma, Sharpness, Contrast, Backlight, Antiflicker, White Balance)
- Resolution support:
  - 16:9 1080p (1920x1080), HD720p (1280x720), 540p, 480p, 360p, 240p, 180p
  - 4:3 1080p (1920x1080), HD720p (1280x720), 540p, 480p, 360p, 240p, 180p
- 11:9 CIF (352x288), QCIF (176x144)
- Webcam power saving
- Supported OS Win7, 8, 8.1, 32/64bit, Linux (UVC class driver)

HSR RJ12 Expansion (F160)

The Serial Expansion feature provides an additional 6 serial ports for HSR Legacy peripherals.

Disclaimer: This is not an RS-232 interface. These ports are for use with legacy Radiant peripherals only and WILL NOT support devices that require HardWare handshake.

Each port supplies 12V, 500mA, but total power drain on all 6 ports cannot exceed 1.5A.

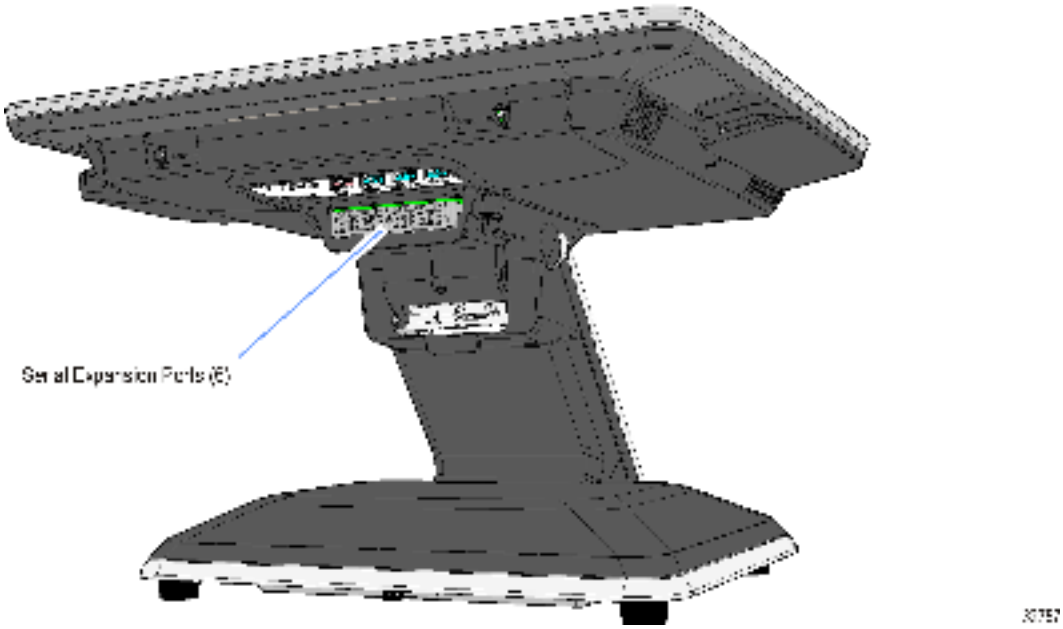

Key Features

- Robust USB driver supporting hot plugging of the USB UART without interrupting or crashing the serial application
- Sticky COM numbers ensuring legacy serial application support
- ±15kV HBM ESD on USBD+/USBD
- USB 2.0 Compliant Interface
  - Supports 12 Mbps USB full-speed data rate
  - Supports USB suspend, resume and remote wakeup operations
- Enhanced UART Features
  - Data rates up to 12 Mbps (limited by the length of the serial cables and the RS-232 interface buffers)
  - Fractional Baud Rate Generator
  - 128 byte TX FIFO
  - 384 byte RX FIFO
  - 7, 8 or 9 data bits

    - 1 or 2 stop bits
    - Odd, even, mark, space or no parity
    - Automatic Hardware (RTS/CTS Flow Control
    - Automatic Software (Xon/Xoff) Flow Control
    - Multidrop mode
    - Auto Transceiver Control
    - Half-Duplex mode
- Internal 48 MHz clock with clock divisors programmable down to 6 MHz
- Virtual COM Port Drivers
    - Windows 2000, XP, Vista, 7, and 8
    - Windows CE 4.2, 5.0, 6.0, and 7.0
    - Linux

The large 128-byte TX FIFO and 384-byte RX FIFO of each port help to optimize the overall data throughput for various applications. In addition enhanced ESD protection and short circuit protection help to make the overall design especially well-suited for retail hardened applications.

3-Port Serial Expansion (F161)

The Retail Serial Expansion board supports additional RS-232 ports; two RJ50 ports and one standard DB9 port. The ports can be configured to 5V, 12V or RI.

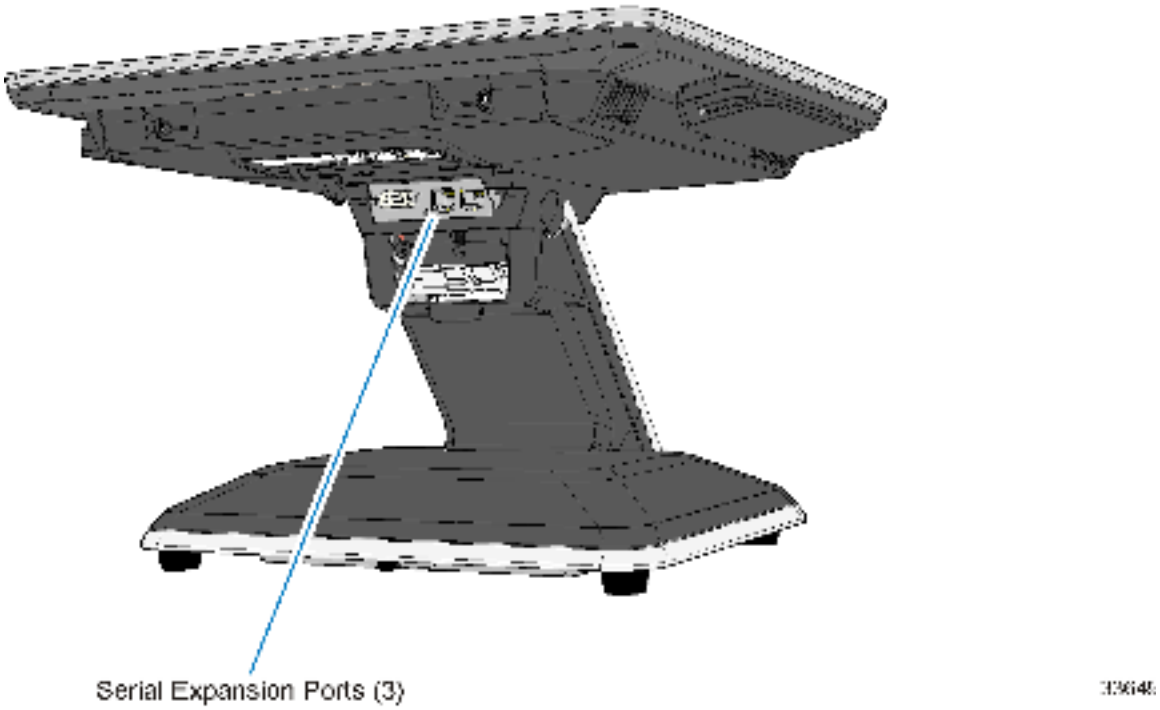

Features

- Sticky COM numbers ensuring legacy serial application support;
- ±15kV HBM ESD on USBD+/USBD-
- USB 2.0 Compliant Interface
  - Supports 12 Mbps USB full-speed data rate
  - Supports USB suspend, resume and remote wakeup operations
- Enhanced UART Features
  - Data rates up to 12 Mbps (limited by the length of the serial cables and the RS-232 interface buffers) Fractional Baud Rate Generator
  - 128 byte TX FIFO
  - 384 byte RX FIFO
  - 7, 8 or 9 data bits
  - 1 or 2 stop bits
  - Odd, even, mark, space or no parity
  - Automatic Hardware (RTS/CTS or DTR/DSR) Flow Control
  - Automatic Software (Xon/Xoff) Flow Control

- Multidrop mode
- Auto Transceiver Control
- Half-Duplex mode
- Internal 48 MHz clock with clock divisors programmable down to 6 MHz
- Virtual COM Port Drivers
- Windows 2000, XP, Vista, 7, and 8
- Windows CE 4.2, 5.0, 6.0, and 7.0
- Linux

The large 128-byte TX FIFO and 384-byte RX FIFO of each port help to optimize the overall data throughput for various applications. In addition enhanced ESD protection and short circuit protection help to make the overall design especially well-suited for retail hardened applications.

Each serial port can deliver 500mA at 12V on the RTS handshake line or use it as a standard handshake. The combined power draw on all 3 ports should not exceed 1.5A on 12V.

Each port has a current sense protection designed to prevent the system from high current spikes caused by hot plugging a serial peripheral.

Side Mount Imager (F170)

The RealPOS XR5 provides an integrated side mount imager option. The imager module is mounted on the left side of the operator display. The imager module provides fast and accurate reading and decoding of barcodes. When the imager module is not installed, a cover for the imager location is provided. The imager module interfaces the system via USB.

Side Mount UV Bill Validator (F171)

The RealPOS XR5 provides an integrated side mount UV bill validator option. The UV Bill Validator is mounted on the left side of the operator display.

Caution: Avoid looking directly at UV lights.

Customer Displays

2x20 Customer Display on the POS Stand (F450)

The NCR RealPOS XR5 can be configured with an integrated NCR 7701-F450 2x20 Customer Display. The display mounts on the back of the Display Stand.

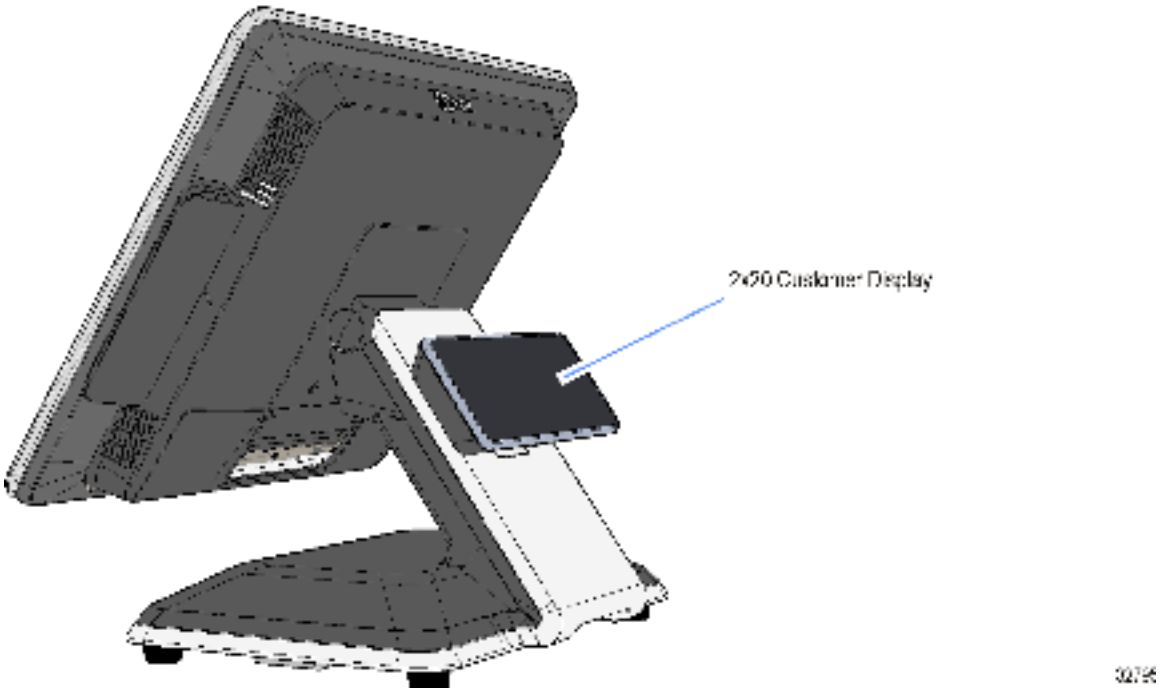

2x20 Customer Display on the Extension Arm (F451/F457)

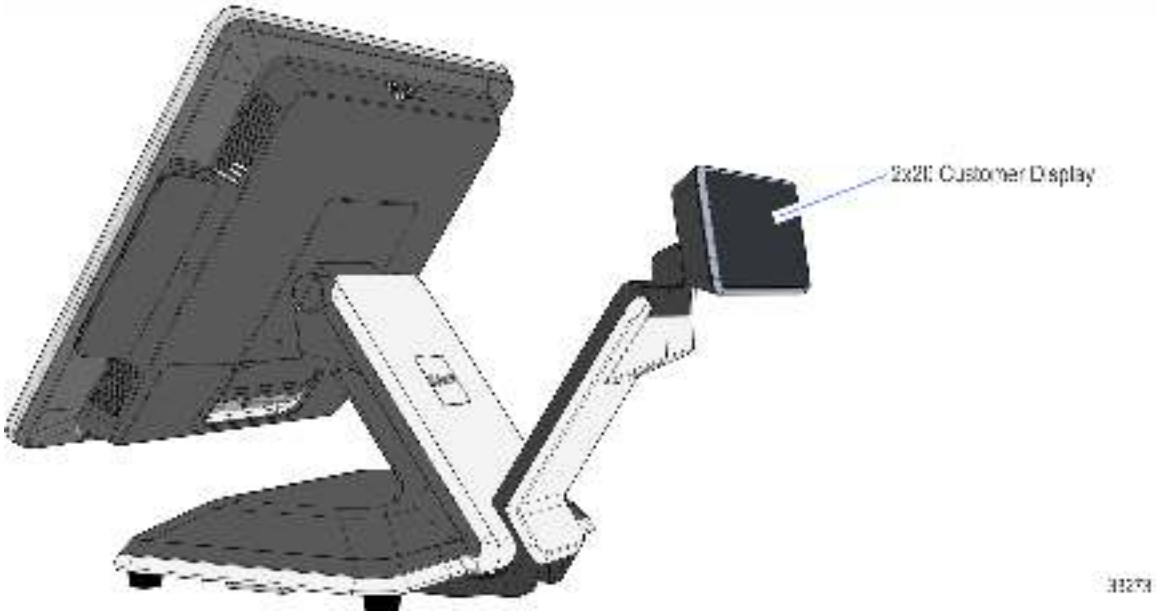

10.4-Inch Integrated Non-touch (F452) or PCAP (F459) or Resistive Touch (F461) LCD Customer Display on the POS Stand

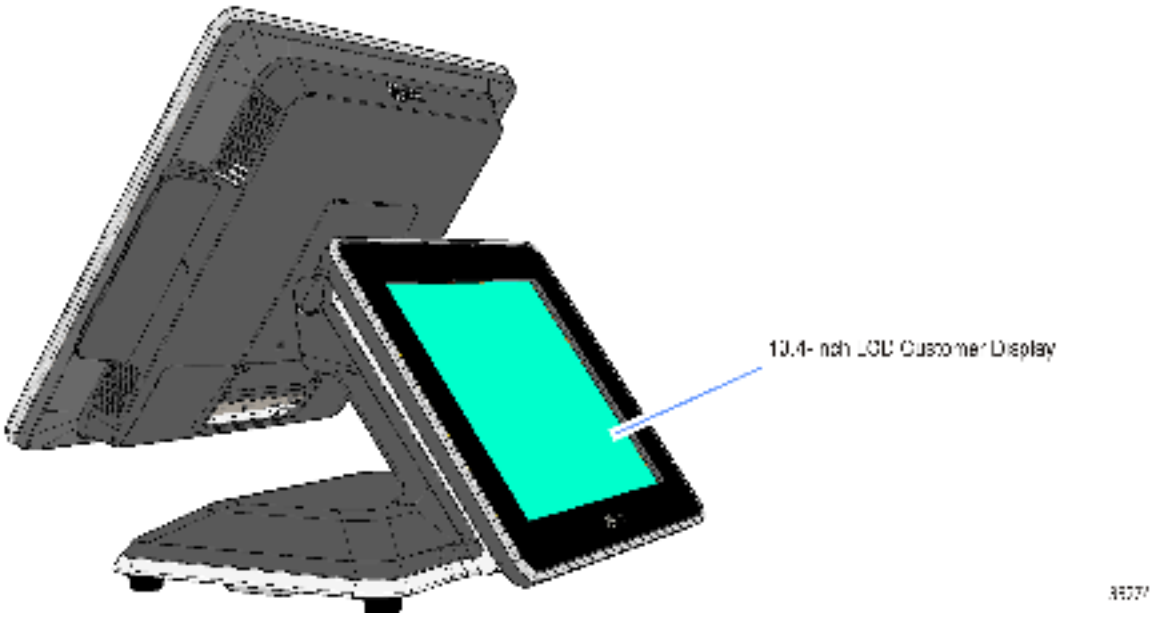

10.4-Inch Customer Display on the Extension Arm (F453/F458)

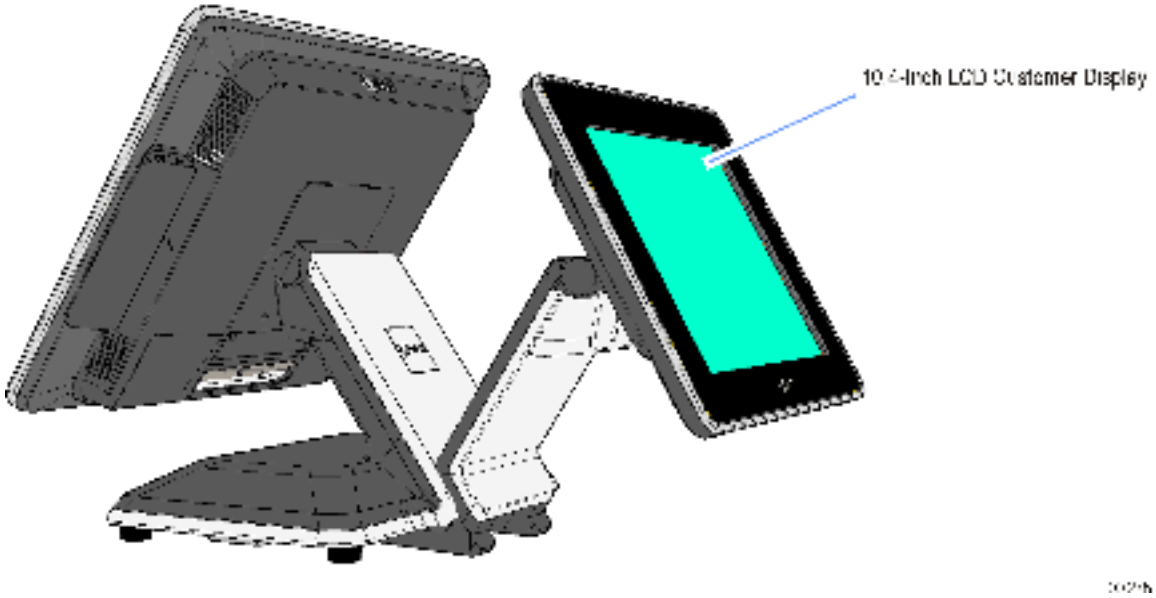

Graphical VFD Customer Display (F454)

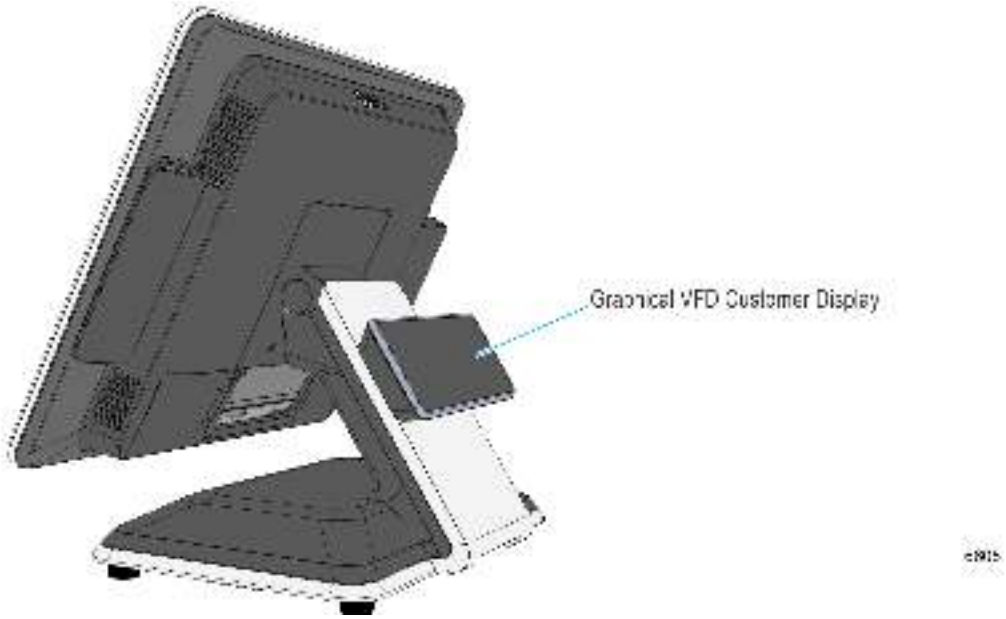

High Mount 2x20 Customer Display (F460)

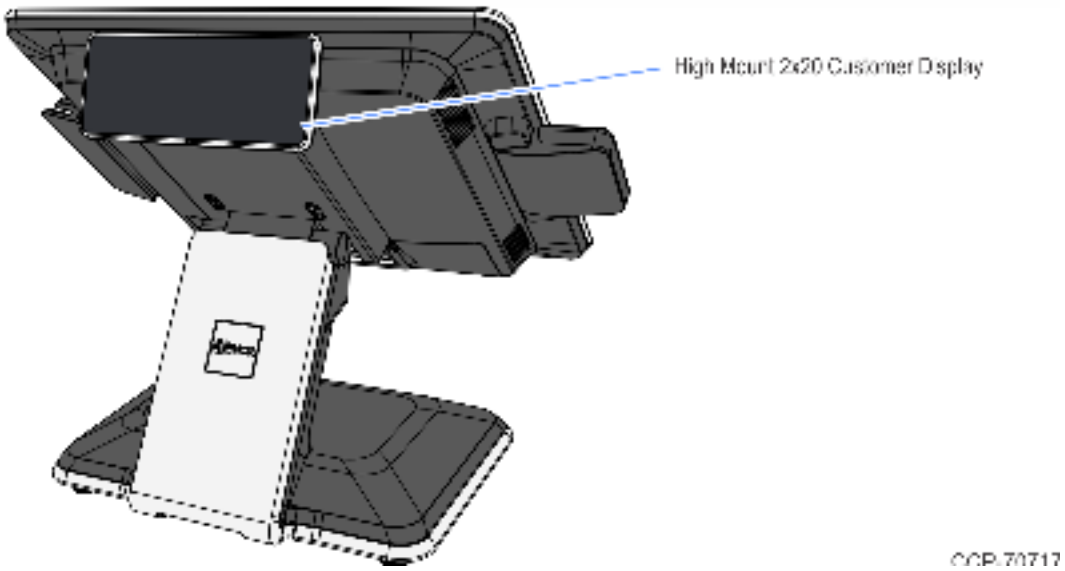

2x20 Adjustable High Mount Display (F490)

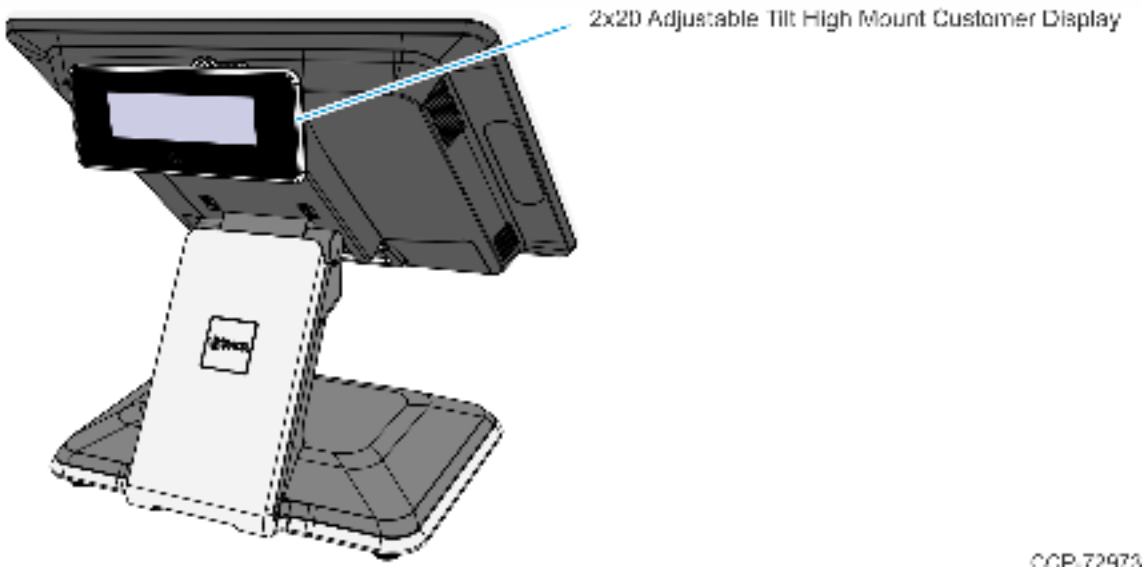

2x20 (F550) or Graphical VFD (F554) Customer Display on the XL Stand

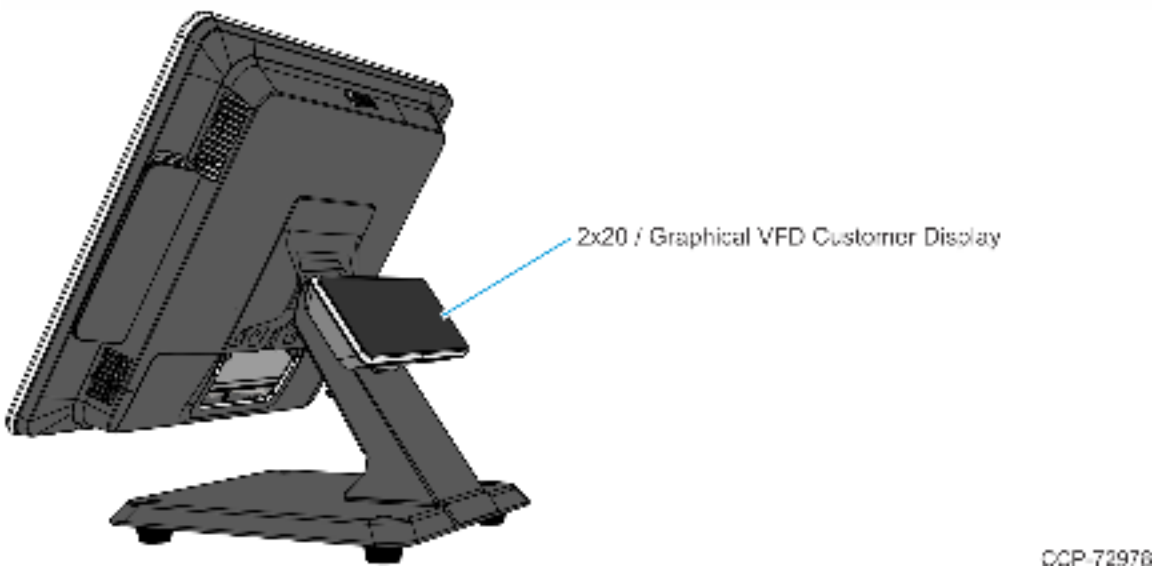

10.4-inch Integrated Non-touch (F552) or PCAP (F559) LCD Customer Display on the XL Stand

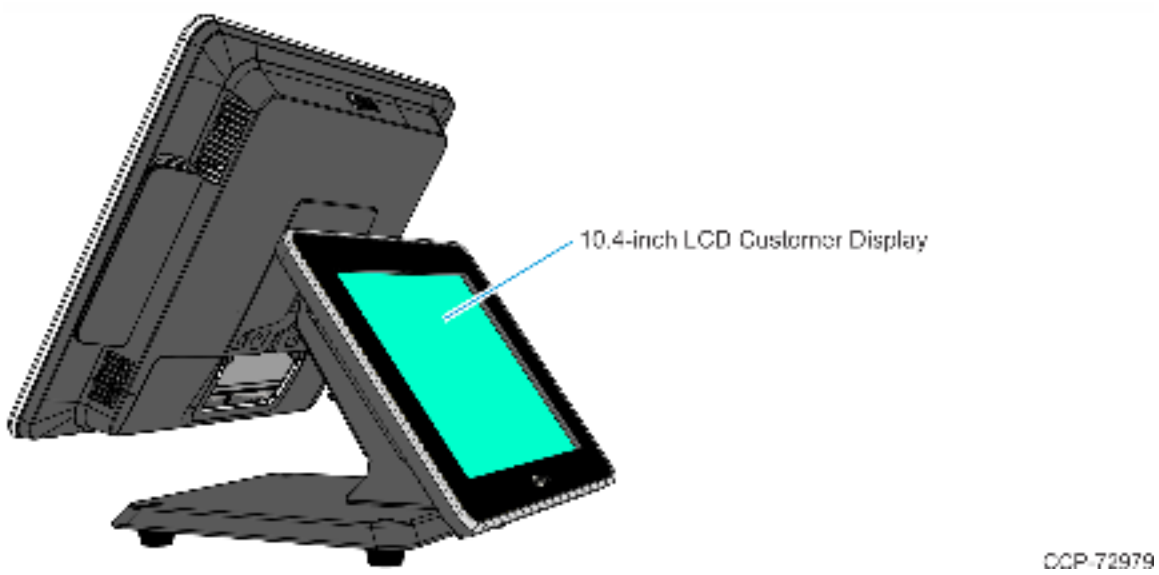

Odometers

The RealPOS XR5 contains on-board *odometers* in non-volatile memory that capture vital health and usage statistics of system components, which are used to help prevent system failures. Statistics are kept on the following item.

- System Up Time
- Primary Screen On Time
- Good/Bad MSR Swipes
- System Startup Count
- System Shutdown Count
- Cash Drawer Open Count
- System FAN On Time
- CPU throttle time

This data can be used to proactively service the terminal, based on usage data or simply improve the service diagnostic analysis. This results in fewer service calls and more accurate, timely fixes.

How is the Odometer Statistics Used?

Odometers are used by NCR Services to track terminal usage for preventive/timely actions to potential and imminent service issues.

- *Predictive Services* uses this data to determine when a component might fail and to dispatch a Customer Engineer with the correct part on the next service visit, or at a convenient time before the component fails.

  Predictive End of Life is a proactive service strategy designed to move service activity from a reactive break-fix model to a proactive service module. Avoiding reactive service calls has the effect of reducing the number of failures and reducing the amount of downtime of the terminal.

  How does it work? NCR collects the device configuration data on a weekly basis, along with information on the activity levels of individual models. As the activity level approaches the end of the component's designed life, NCR flags the terminal with a notification that a module needs proactive replacement. The NEXT time an NCR technician goes on site to resolve an incident, they are be informed that the module is due for replacement and they replace that module while on-site.
- *Advanced Exchange* (depot repair) uses the data to bring the terminal back to a serviceable state and replaces any components that are nearing end of life thresholds.
- *Repair Suppliers* use the data to reset the odometers after the component is repaired.

Chapter 2: Hardware Installation

Installation Restrictions

- The *NCR RealPOS XR5* conforms to all applicable legal requirements. To view the compliance statements see the *NCR RealPOS Terminals Safety and Regulatory Statements* (B005-0000-1589).
- Install the RealPOS XR5 near an electrical outlet that is easily accessible. Use the power cord as a power disconnect device.
- Do not permit any object to rest on the power cord. Do not locate the RealPOS XR5 where the power cord can be walked on.
- Use a grounding strap or touch a grounded metal object to discharge any static electricity from your Body before servicing the RealPOS XR5.

Warning: This unit contains hazardous voltages and should only be serviced by qualified service personnel.

Caution: Do not connect or disconnect the transaction printer while the terminal is on. This can result in system or printer damage.

Installing Third Party VESA Mounts

The 7702-K321 VESA Mount Adapter Plate is required when using an external VESA mount system if the mounting plate is larger than the inset in the Back Cabinet.

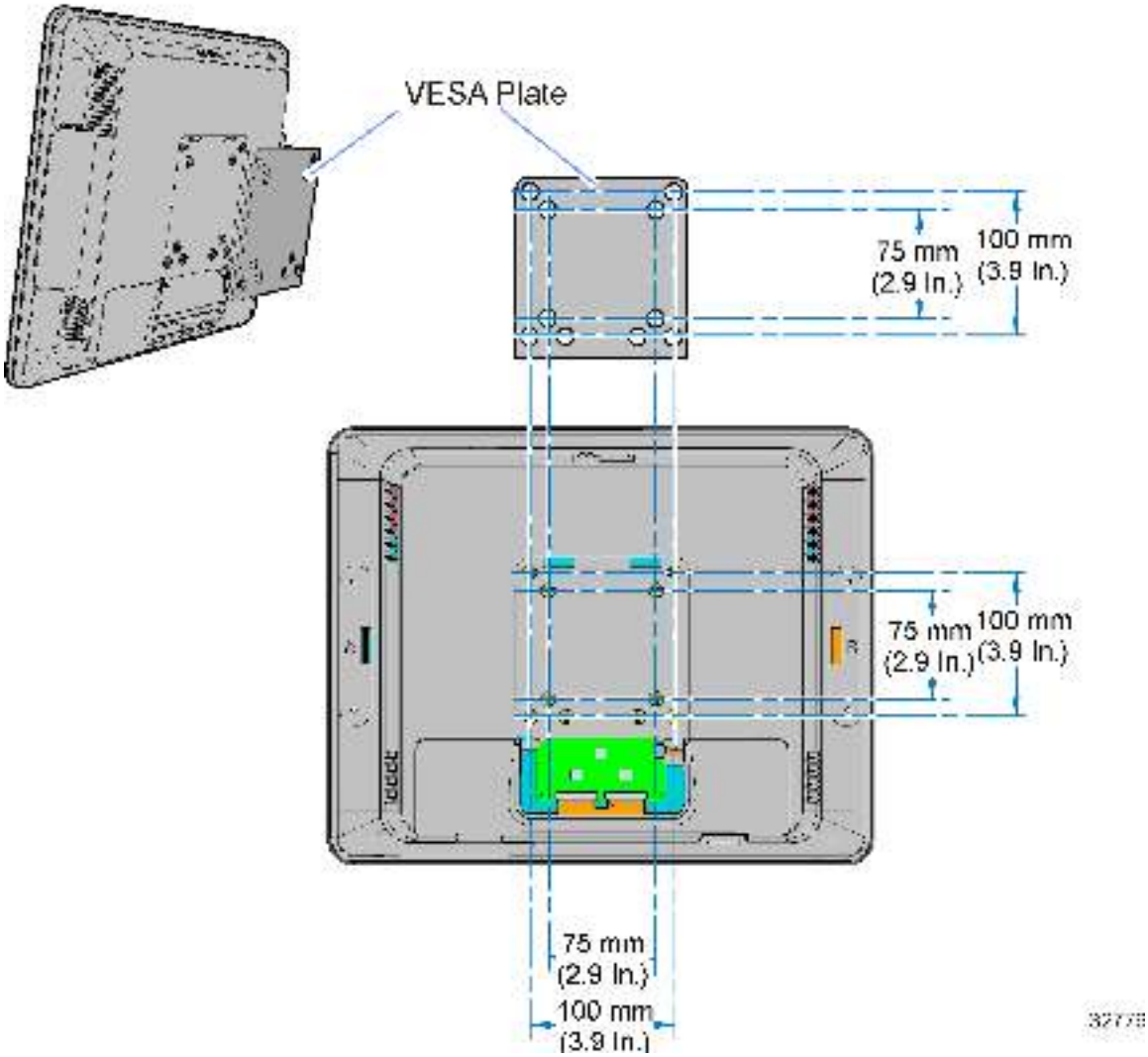

Mounting Screw Length

The required screw length to mount the RealPOS XR5 on a third party mount, and using the VESA Plate spacer, depends on the thickness of the Third Party Mounting Plate.

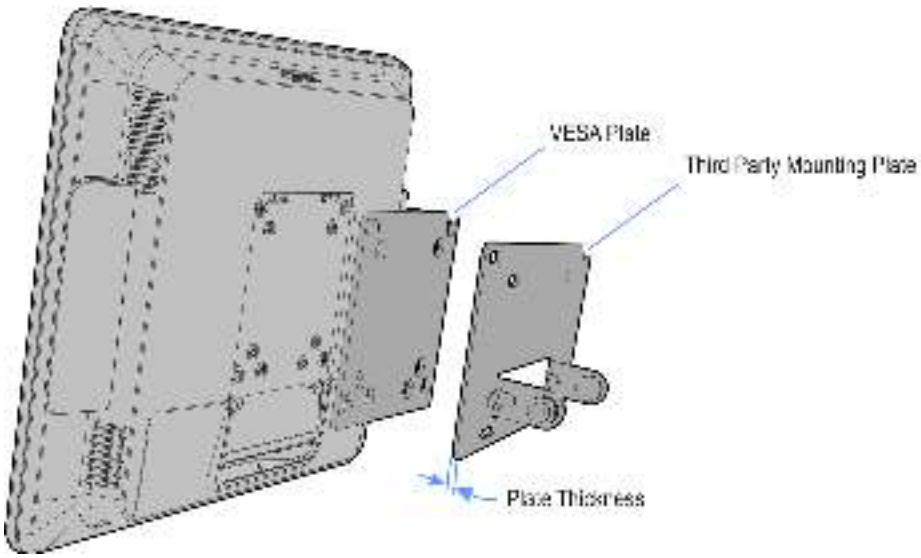

Use the below table to determine the proper screw to use.

Mounting Plate Thickness	Screw Size	Screw Description
0.5mm — 2mm	M4 x 10	Steel Pan Head with SEMS Washer
2mm — 4mm	M4 x 12	Steel Pan Head with SEMS Washer
4mm — 6mm	M4 x 14	Steel Pan Head with SEMS Washer
6mm — 8mm	M4 x 16	Steel Pan Head with SEMS Washer
8mm — 10mm	M4 x 18	Steel Pan Head with SEMS Washer
10mm — 12mm	M4 x 20	Steel Pan Head with SEMS Washer

Ergonomic Workplace

The NCR RealPOS XR5 has a high brightness LCD with an anti-glare screen but for best results please observe the following when considering the terminal workplace.

- Avoid direct glaring and reflective glaring light. Locate the terminal in a controlled luminance surrounding. When installed next to windows orient the terminal so it does not reflect the outside light.
- If possible, avoid reflective glaring caused by electric light sources.
- Position the terminal for ideal viewing angles.

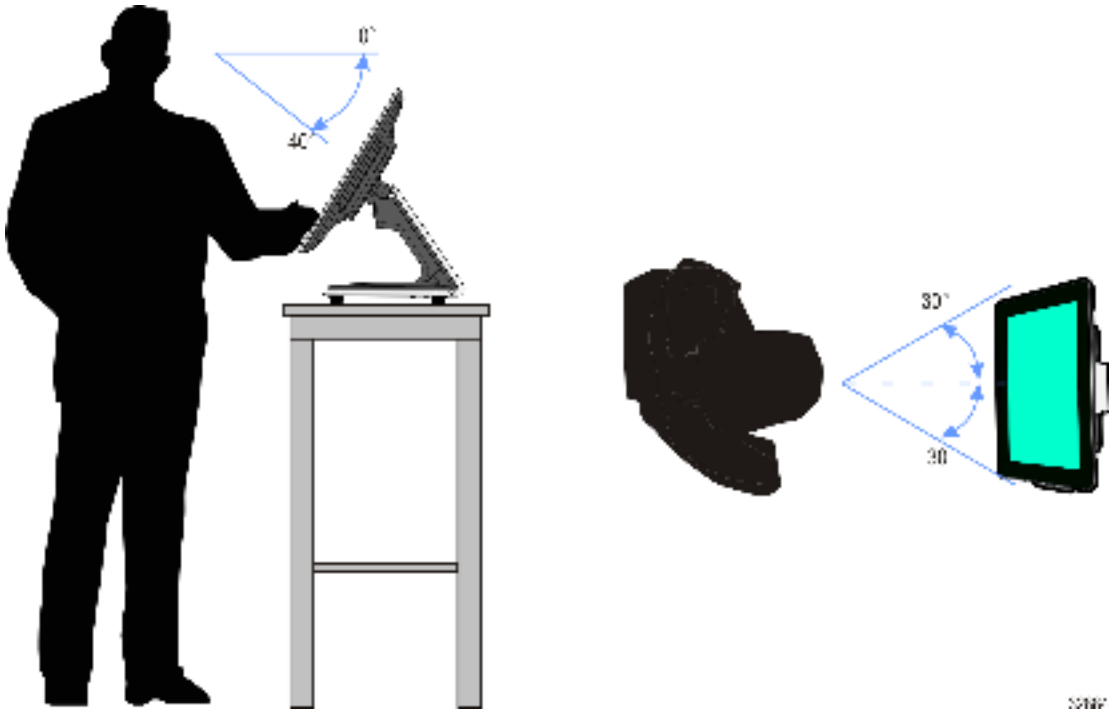

Installing the Terminal

The terminal can be mounted using a variety of mounts:

- Table-Top Stand *(7701-F031/7701-F032/7702-K031/7701-K032*)
- XL Stand *(7701-F033)*
- Wall Mount (*7701-F320/7702-K320*)
- Wall Mount (*7701-F322/7702-K322*); used when the 7701 is configured with the HSR RJ12 Expansion feature (*7701-F160*) or kit (*7702-K160*)
- Kiosk Pedestal
- Third-Party VESA Mounts

This chapter explains how to perform an "Out-of-box" installation of a RealPOS XR5 configured with the standard Table Top Stand and how to connect optional peripheral devices. For installation procedures for the other mounting options see their associated kit instructions.

The RealPOS XR5 comes fully assembled and ready to use. All that is required to install is connect the AC Power Cord, LAN Cable, and peripheral device cables

Connecting the Peripheral Cables

1. Unpack the terminal in the desired location.
2. Pivot the display toward the back.

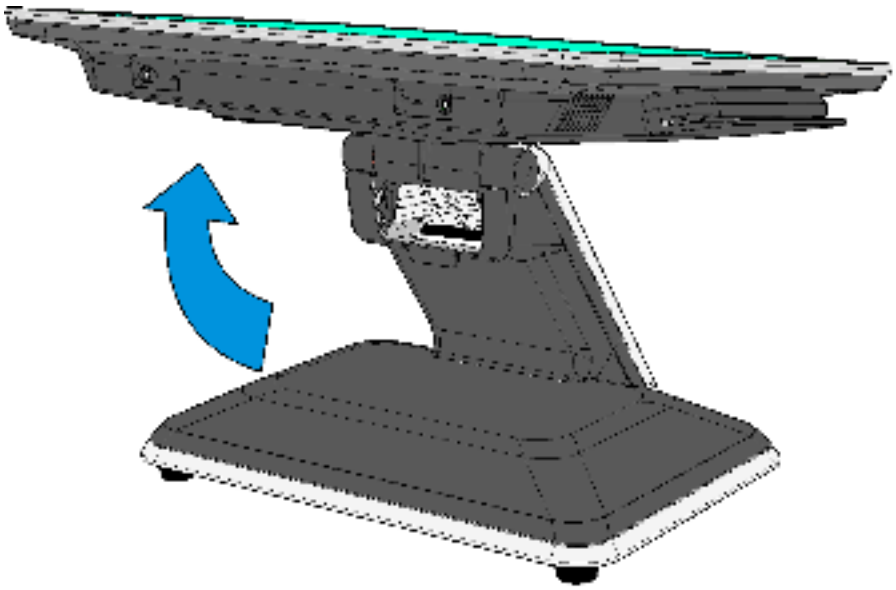

3. Open the Terminal Cable Cover. Press on the indentations in the Cable Cover to unlatch the cover and then pivot the cover open.

Note: If the unit has the Cable Cover Security Bracket installed you must also loosen the two captive screws before you can open the cover.

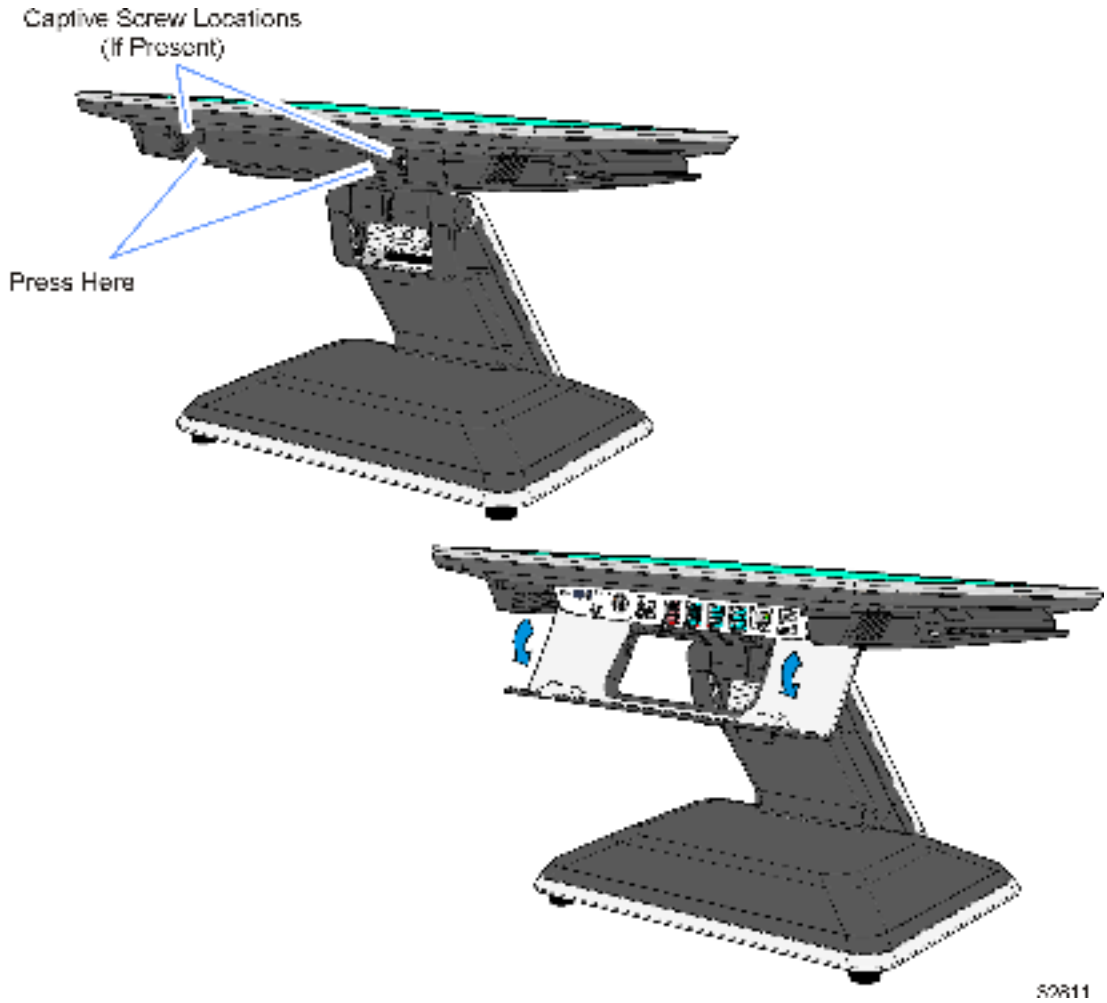

4. Connect the peripheral cables to I/O Panel.

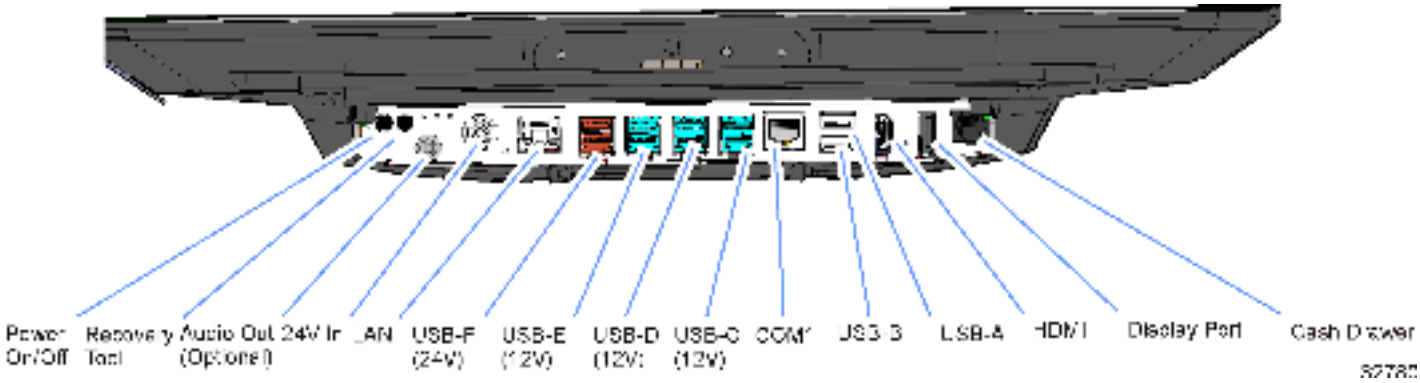

Cable Routing

Cables are routed out the opening in the Cable Cover and down through the Table-Top Stand.

1. Remove the Upper Stand Cover by pivoting it away from the stand. The cover has a simple snap fit connection at the top.

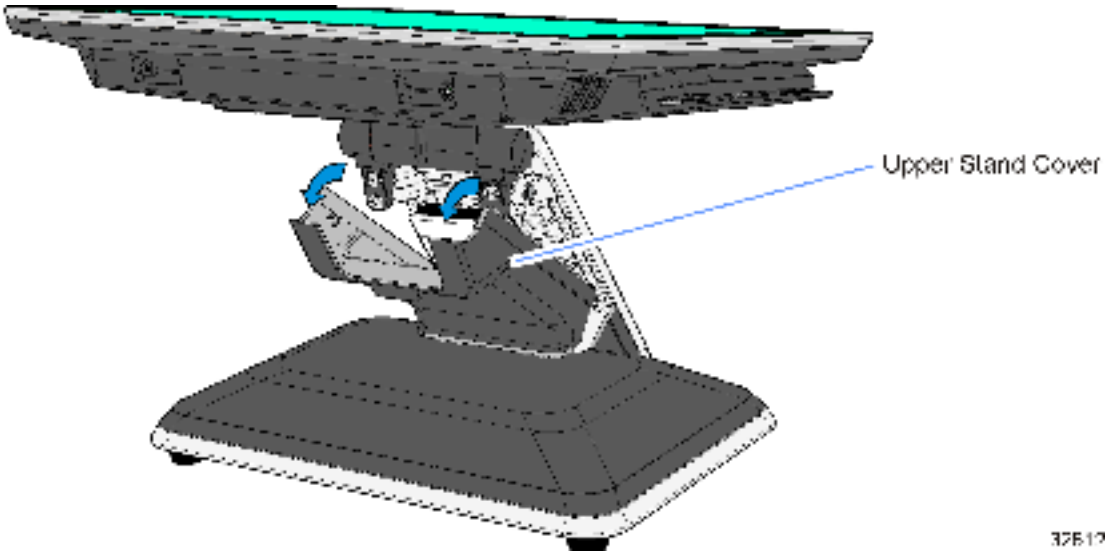

2. Open the Base Cable Cover (captive thumb screw).

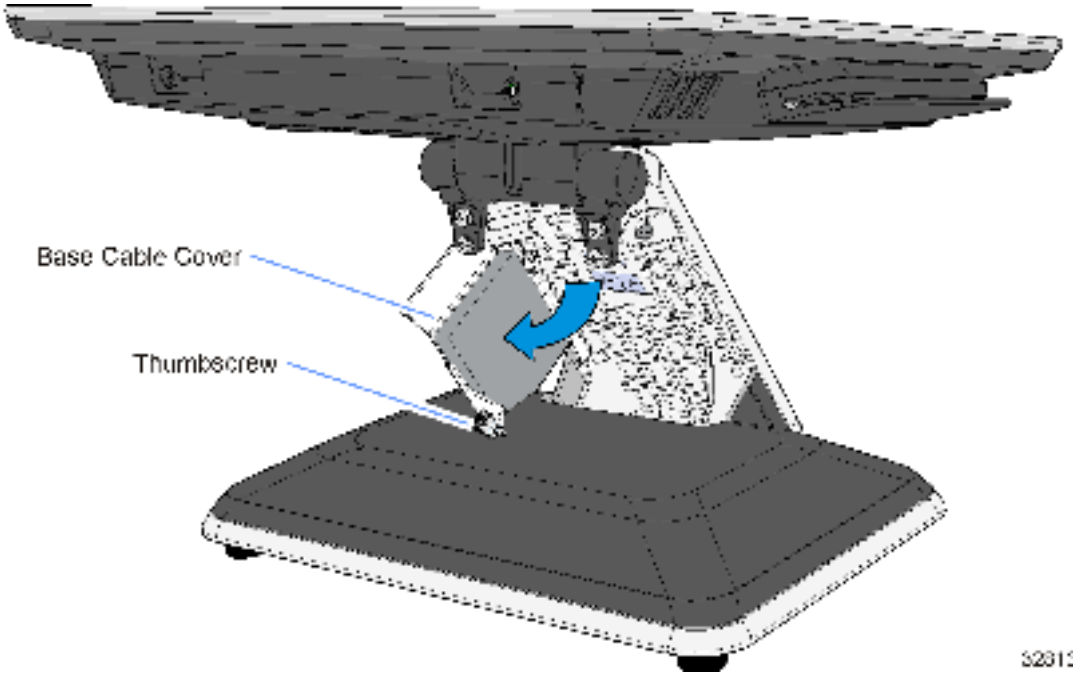

3. Route the cables down through the opening in the Stand Base.

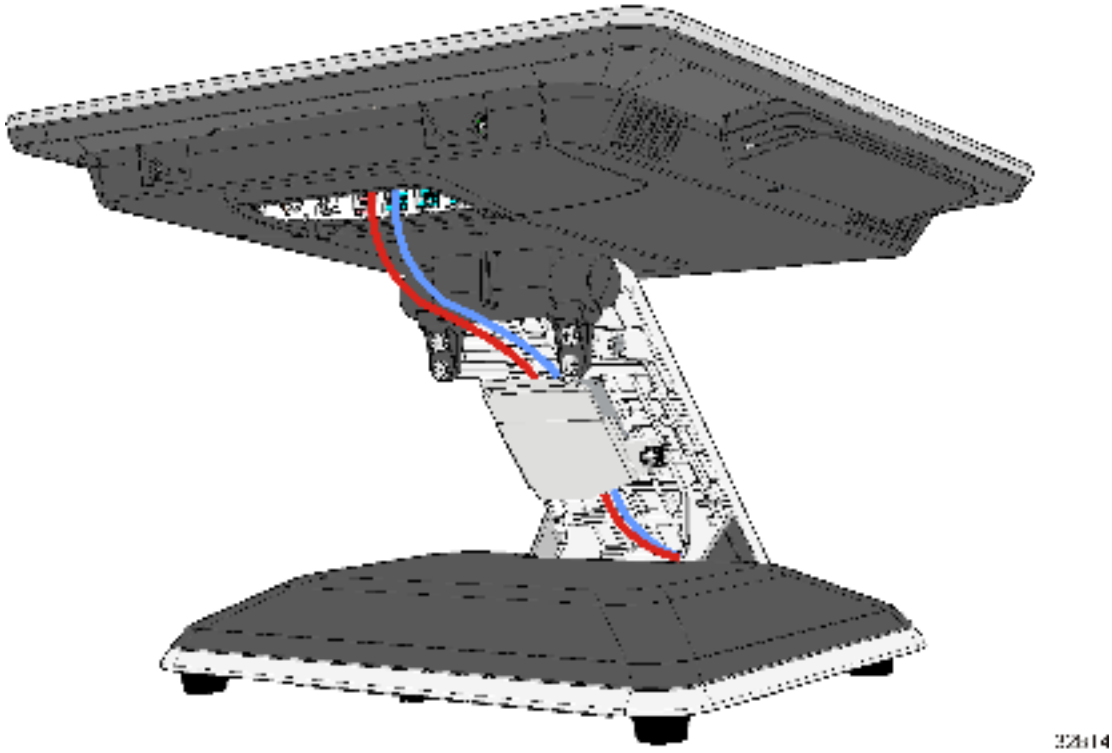

4. Close the Base Stand Cover and secure it with the Captive Thumb Screw.
5. Replace the Upper Stand Cover.

Connecting AC Power

The 7701 receives power from an external 24 V power brick.

Caution: The 7701 requires the NCR 24 V power supply that is shipped with the terminal. Use of other power bricks may cause damage to the unit.

1. Connect the Power Supply cable to the DC Power connector on the terminal.
2. Connect the AC Power Cord to the Power Supply and to an AC outlet.

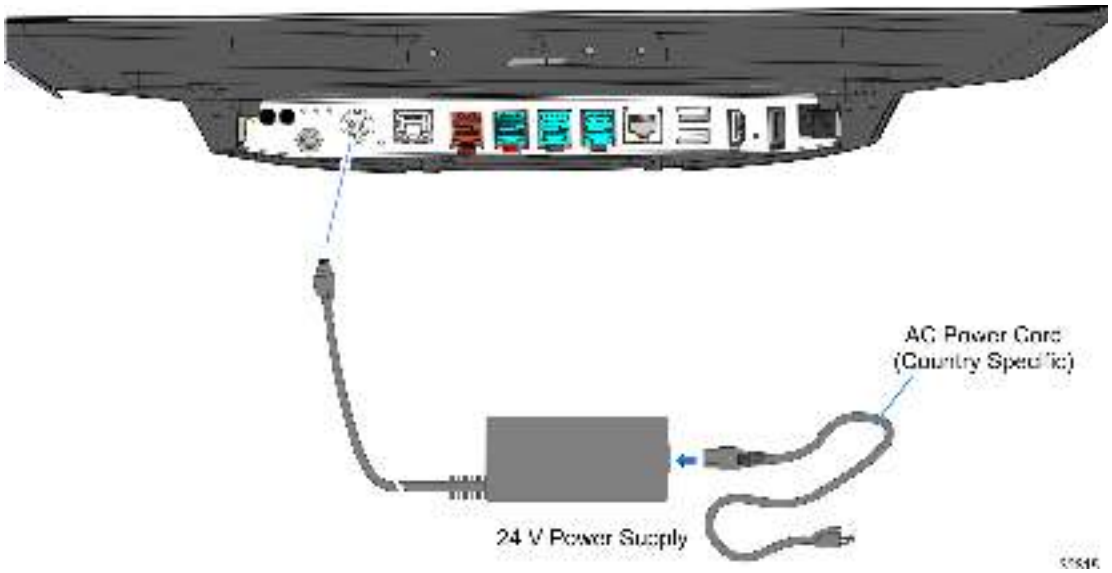

Caution: Do not connect or disconnect the 24V Power Cable from the terminal with the AC Power Cord connected to an AC outlet.

Troubleshooting: Terminal Unresponsive After Connecting AC Power

If the cautions are not regarded during powering on the terminal a power on error could occur. The terminal may appear dead or unable to power on. Follow the previous steps to plug in the terminal, wait 60 seconds, and re-attempt powering on the terminal.

Caution: Do not connect or disconnect the 24V Power Cable from the terminal with the AC Power Cord connected to an AC outlet. This is known as hot plugging and should not be done on this terminal.

Power Supply Bracket

An optional power supply bracket is available to mount the power supply on a vertical surface or under a table top (see the Wall Mount Power Supply Bracket Kit Instructions (7600-K310).

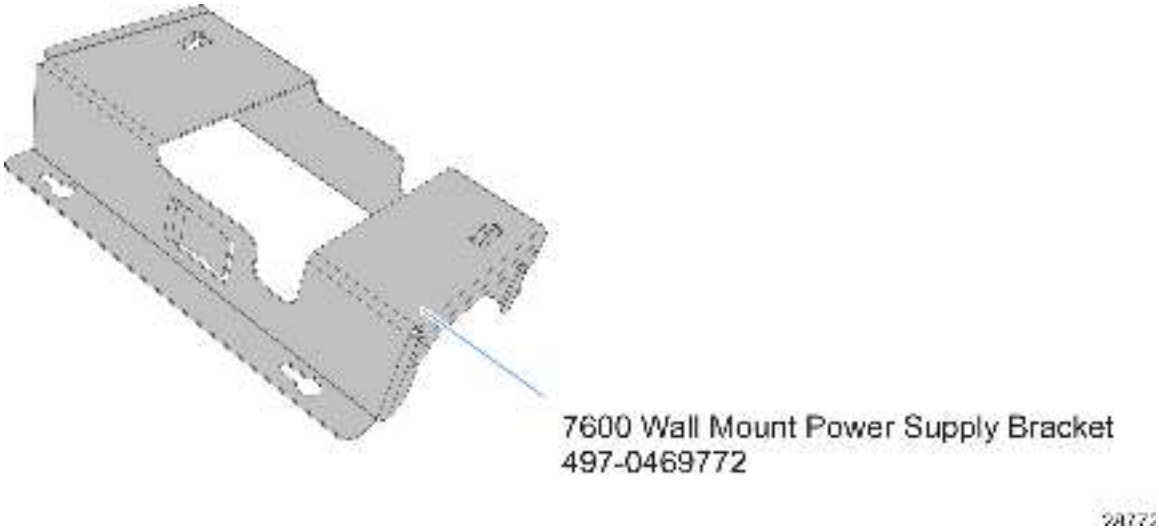

Disconnecting the Power Cable

The Power Cable connector locks into position when connected to the terminal and cannot be removed by simply pulling on the cable. To remove it you must slide the outside housing out from the terminal to unlock it and then pull it out of the terminal connector.

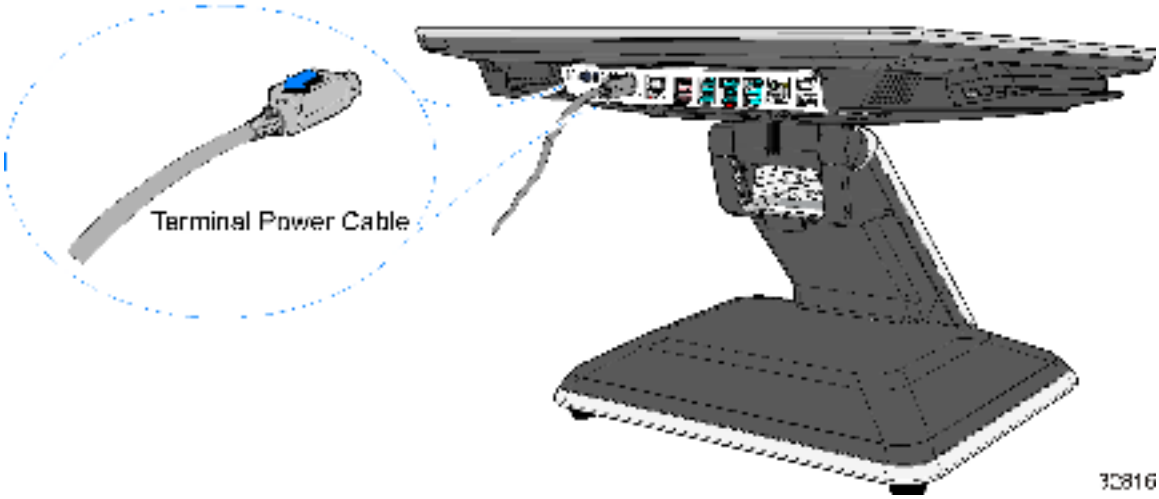

Installing a Transaction Printer

Connect the Powered USB Printer Interface Cable to the USB Connector and Power Connector on the printer and to the 24 V Powered USB Connector on the terminal.

Installing a Cash Drawer

The Cash Drawer can be connected to the Cash Drawer connector or to the transaction printer.

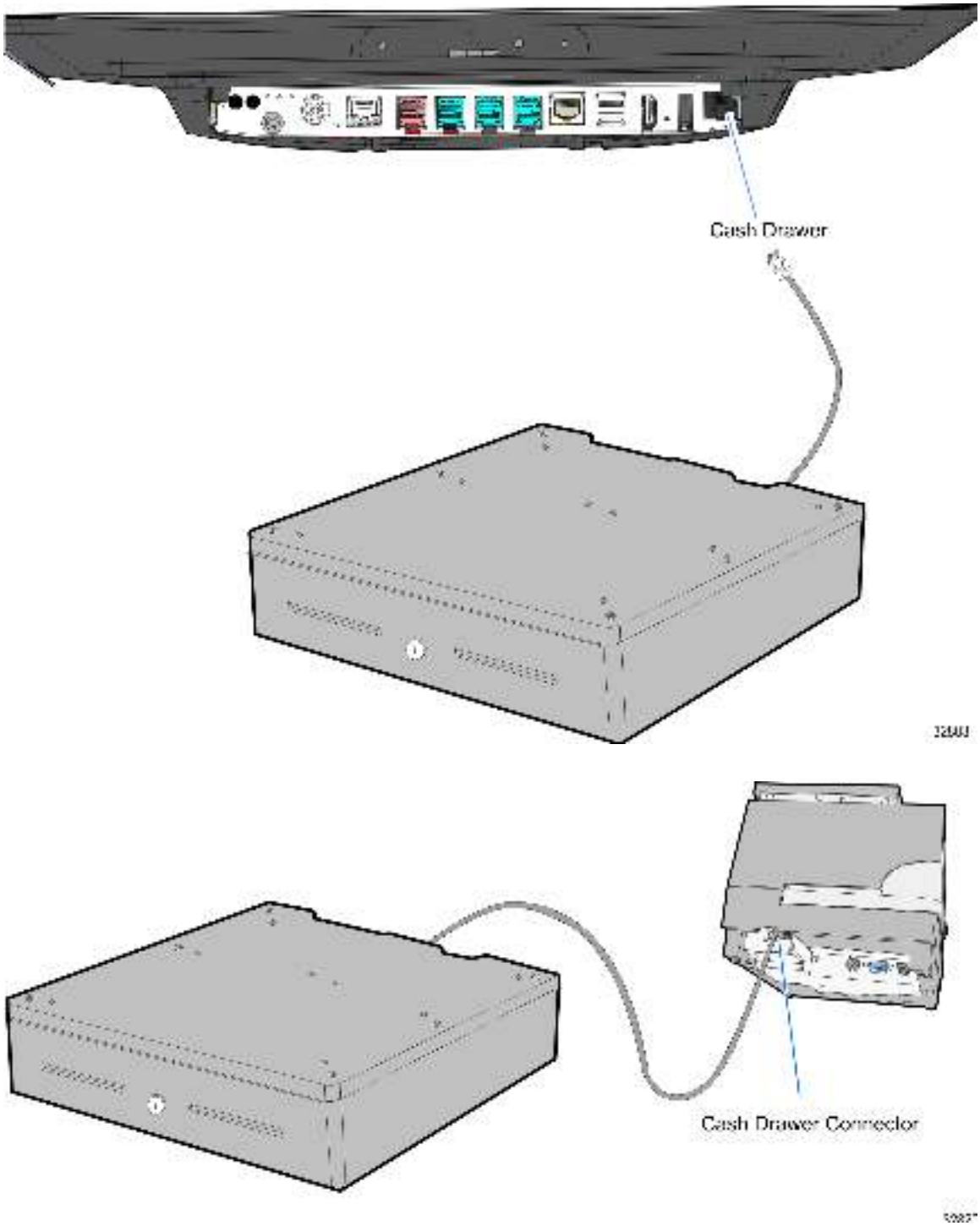

Second Cash Drawer Cable Connection

The terminal supports a 2-drawer configuration with a Dual Cash Drawer Cable. Connect this cable to the terminal or transaction printer cash drawer connector.

There are two versoins of the Dual Cash Drawer Cable:

- 1432-C516-0009 (24V)
- 1432-C517-0009 (12V)

Caution: The two cables look very similar. Make sure you use the correct one. Connecting the wrong cable can cause system damage.

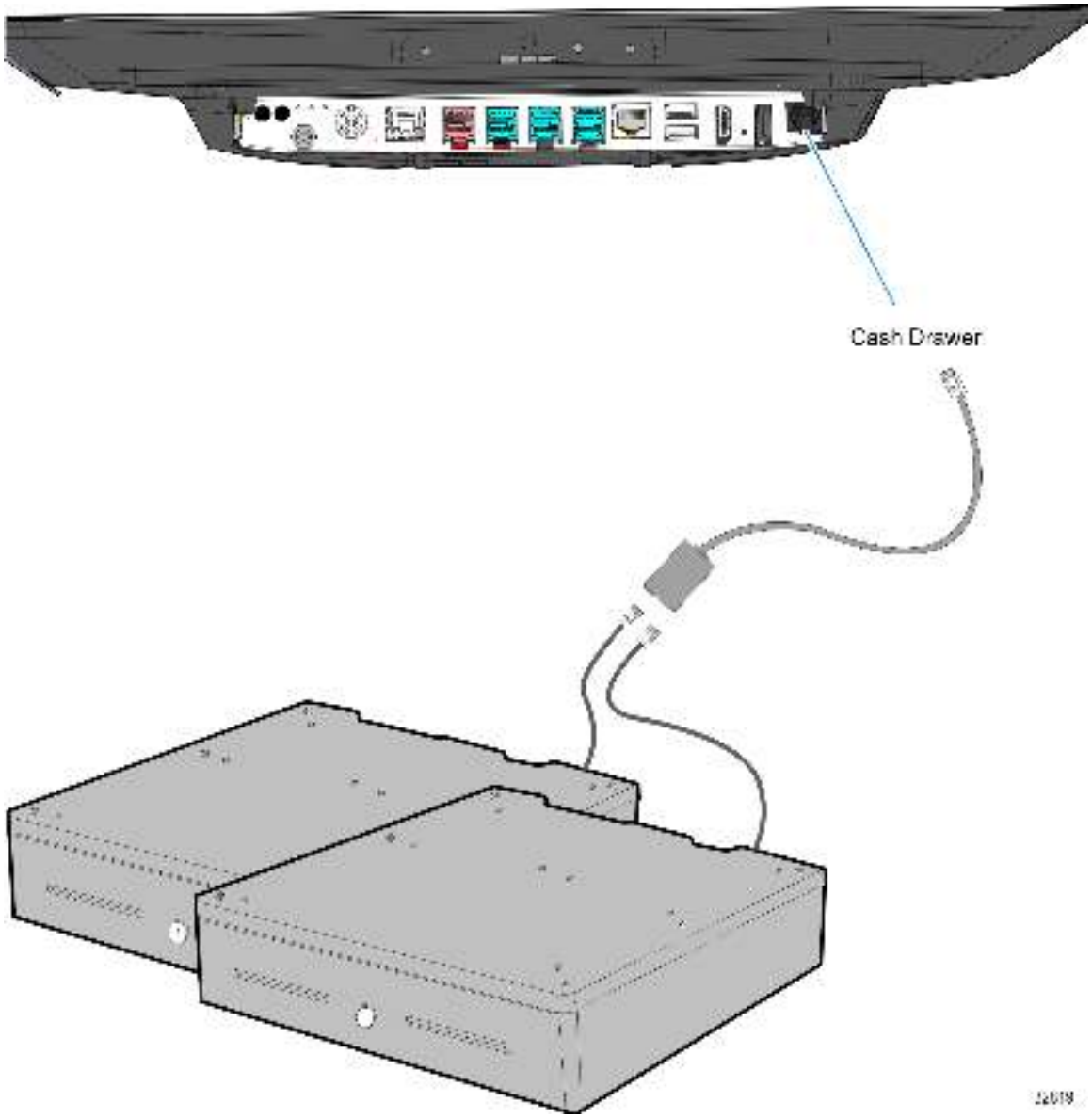

Wireless Antenna

Note: The Wireless Antenna Assembly has an internal antenna and if the reception is adequate the External Dipole Antenna can be left off for cosmetic reasons.

Installing the Dipole Antenna

1. Remove the Protective Cap from the Wireless Antenna Assembly (unscrew it).
2. Screw the dipole onto the Wireless Antenna Assembly.

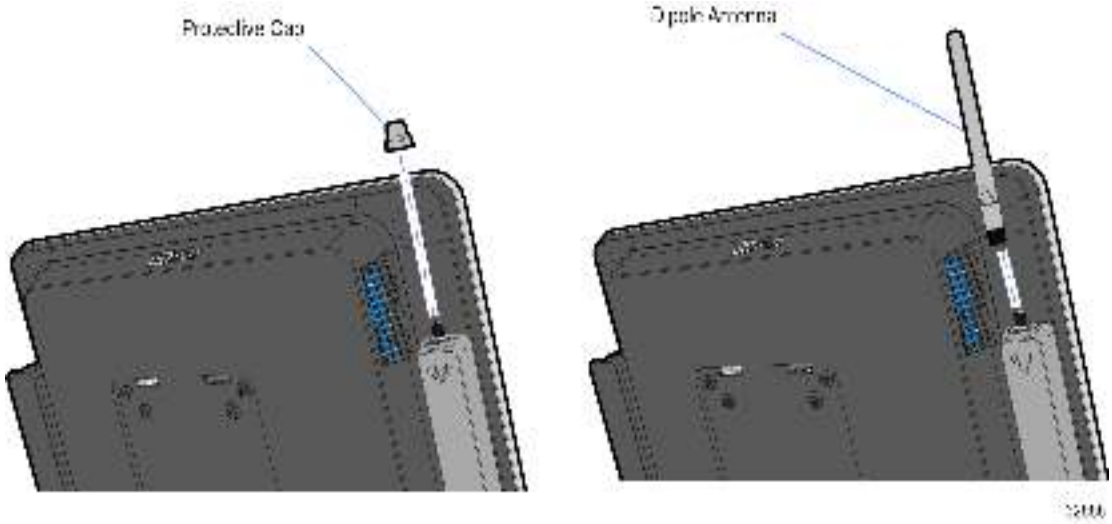

Chapter 3: Operation and Cleaning

Out-Of-Box Powering Up

1. After installing the terminal, power up the system by pressing the Power Switch, which is located behind the Cable Cover.

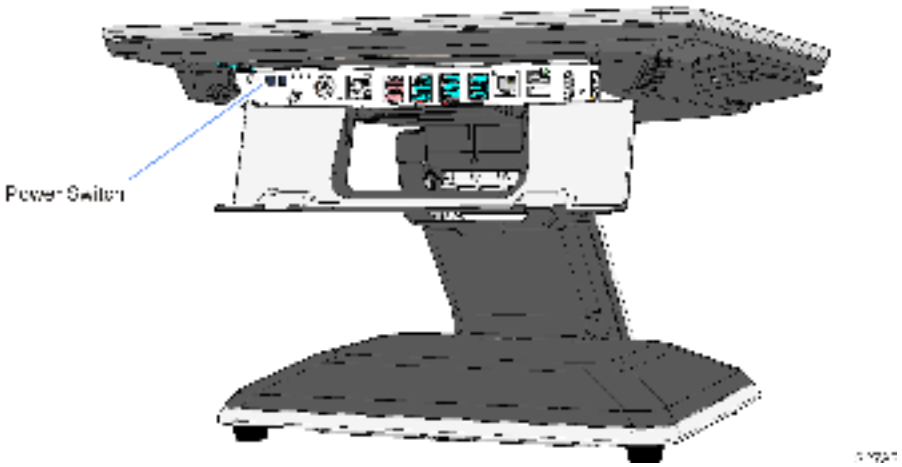

   The system installs the system devices, system settings, and then reboots to continue setup. Complete the System Setup. This varies from OS to OS but the following is typical.

2. The initial setup procedures are performed.
   - Starting Windows
   - Preparing the computer for first time.
   - Checking video performance
3. At the prompts select the **Country or region**, **Time and currency**, and **Keyboard Layout**. Click **Next**.
4. Enter a **Computer Name**. Click **Next**.
5. Accept the **License Terms**. Click **Next**.
6. Set the **Time Zone**, **Date**, and **Time**. Click **Next**.

Administrator Login

In order to install certain software on the terminal you may need Administrator rights.

Username: **NCR**

*Password:***NCR** (Password is case sensitive.)

Brightness Adjustment

Retail Platform Software (RPSW) must be present on the terminal to adjust display brightness.

There are two methods of that can be used to set the display brightness.

- Brightness Control Application
- NCR Retail Systems Manager LE (RSM) Interface

There is also an API available for controlling the brightness setting. See the *SetBrightness Method* in the *NCR Retail System Monitor User Guide*, B005-0000-1768.

Brightness Control Application

1. Run the Brightness Control tool.

   Start >> **All Programs** >> **NCR XR5 Brightness Control**

   The adjustment control is displayed. By default the brightness is set at 100%.

   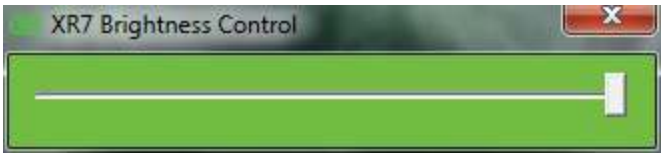

2. Adjust the slide control to the desired brightness level (0 - 100%).
3. The value set is saved in a configuration file. When the system is rebooted the configuration file is read and restores the display to the saved brightness level.

RSM LE Interface

A display profile is provided in RSM.

1. Start RSM.

   Start >> **All Programs** >> **NCR Retail Systems Manager**

2. Expand the Platform menu.

   Platform >> **Display**

3. Adjust the control to the desired brightness level (0 - 100%).

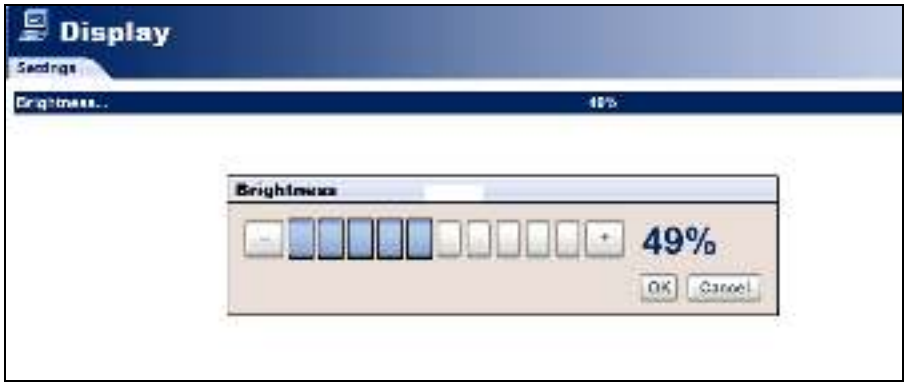

4. The value set is saved in a configuration file. When the system is rebooted the configuration file is read and restores the display to the saved brightness level.

Touch Screens

There are two types of touch screen for the RealPOS *XR5*.

- Projected Capacitive (PCap) Touch Screen
- Resistive Touch Screen

Projected Capacitive Touch Screen

PCap touch screens have all the benefits of normal capacitive touch screens and more.

- Fast processing of tough information
- High sensitivity (use conductive pencils, with hands, and with thin gloves.
- Multi-touch capability (10-finger)
- High resolution
- Improved legibility and display brightness due to optimal light transmission

In addition, the technology of PCap touch screens is characterized by significantly higher robustness and stability than common capacitive touch screens because the active touch surface is located on the back side of the touch screen. instead of the front side. Therefore, the active surface is not directly touched and does not wear off by normal use.

Since most surface contamination do not cause interference to the touch screen the RealPOS *XR5* can be used in public or severe environmental conditions.

Using the PCap Touch Screen

The PCap touch screen responds to the lightest touches. Touching with a single finger resembles the left mouse button. Two fingers are used to zoom IN (fingers brought together) or zoom OUT (fingers pulled apart). Circular motion can be used to rotate an element on the screen. This function must be supported by either the Operating System or the application.

Magnetic Stripe Reader

There are two types of Magnetic Stripe Readers (MSR) for the RealPOS *XR5*.

- ISO 3-Track (Encrypted)
- JIS

The card reading is bi-directional and can be mounted on either the left or right side of the display.

Card Thickness

The MSR module accepts standard cards within the thickness range of 0.68 – 0.84 mm.

Using the MSR

Swipe the card through the slot in the MSR in a quick and steady movement. The magnetic stripe must be facing up and with the stripe in the slot.

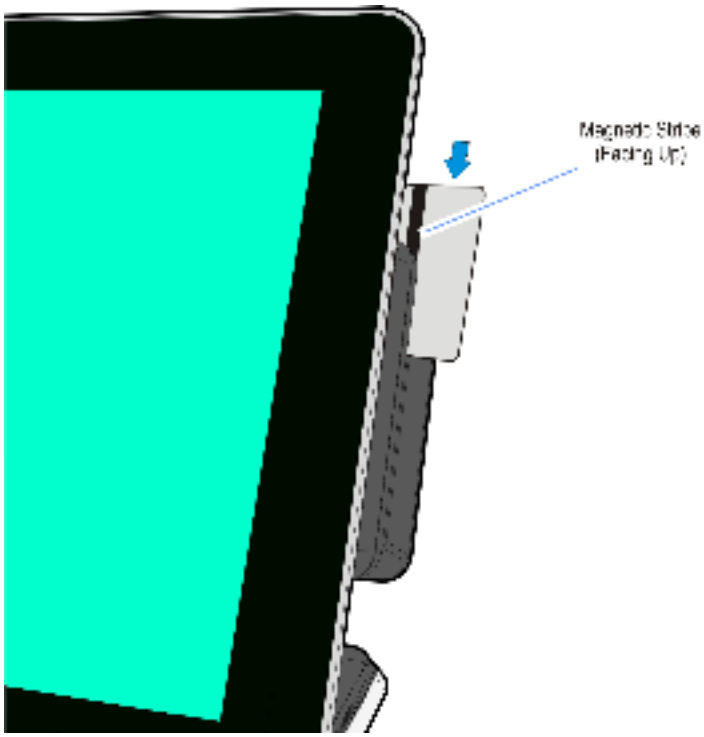

Care of Cards

- Cards should never come in contact with liquids.
- Cards should never be bent or folded in any way.
- Cards should never come in close proximity of a magnetic field.

MSR Cleaning Procedures

MSR Cleaning Cards and MSR Treatment Cards may be purchased from NCR-Direct at http://www.ncr-direct.com. Customers who are participating in the NCR Partnership Services Program can also purchase cards through NCR Services using the *NCR* Part Numbers.

MSR Cleaning and Treatment Cards

Part	Part Number	NCR Part Number
MSR Cleaning Card, Dry		998-0052929
MSR Cleaning Card, Wet	520522 (box of 50)	603-9014730
MSR Treatment Card	9436-2446 (box of 20)	497-0453056

MSR Treatment Card

The MSR Treatment Card is used to assist in protecting Magnetic Stripe Readers from Electrostatic Discharge (ESD), which can cause failures when swiping cards that have metallic hologram stripes.

Swipe the card through the MSR in a smooth motion. Only swipe it down ONCE and up ONCE. Allow the device to dry for 5 minutes before swiping any other cards.

Note: Each long side of the card may be used twice. Each short side of the card may be used only once. Thus, a single card can treat 6 MSR devices with one UP and one DOWN swipe per MSR device. These limits should not be exceeded due to the possibility of spreading contaminants from machine to machine and/or reducing ESD protection.

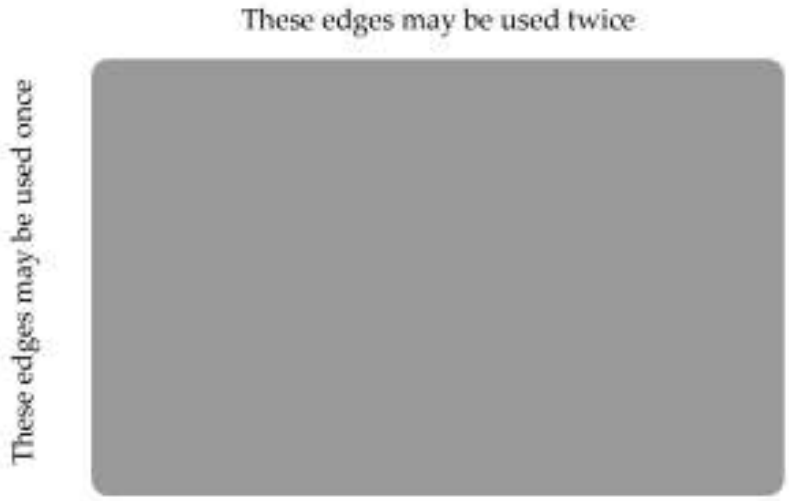

Note: If all six up/down swipes are not used on a fresh card it should be placed in a sealed (Ziploc) bag for future use.

Cleaning/Treatment Frequency

New MSR:

Prior to placing in operation, the MSR device should be swiped with the MSR Treatment Card.

Existing MSR:

An existing MSR should be cleaned using an MSR Cleaning Card before treating it with a MSR Treatment Card. For low use retail establishments, the cleaning and treatment procedures should be followed at least once per month. In areas of extremely high traffic (in excess of 500 swipes per day) or an operating environment that is high in contaminants, such as found in the food service industry, a weekly cleaning and treatment should be performed.

Biometrics Fingerprint Reader

High quality fingerprint templates are imperative for the security of the biometric security system. Low quality fingerprint templates can impact future read rates. Therefore, using the Biometrics Module should be done very carefully. In case of inexperienced users who are using the module for the first time, the process should be assisted (guided) by an administrator or experienced user.

Sensor Cleaning Procedures

Daily Cleaning

Before each authentication, it is recommended that the user first clean the sensor. Place adhesive tape onto the sensor and then pull it off. This assures that residue from previous usage is removed.

Caution: Do not use abrasive materials to clean the sensor, including paper products. Only adhesive tape should be used.

Using the Biometrics Reader

Place your thumb/finger flat and straight on the sensor. If this is not possible, try to place your thumb/finger on the sensor in the same angle every time.

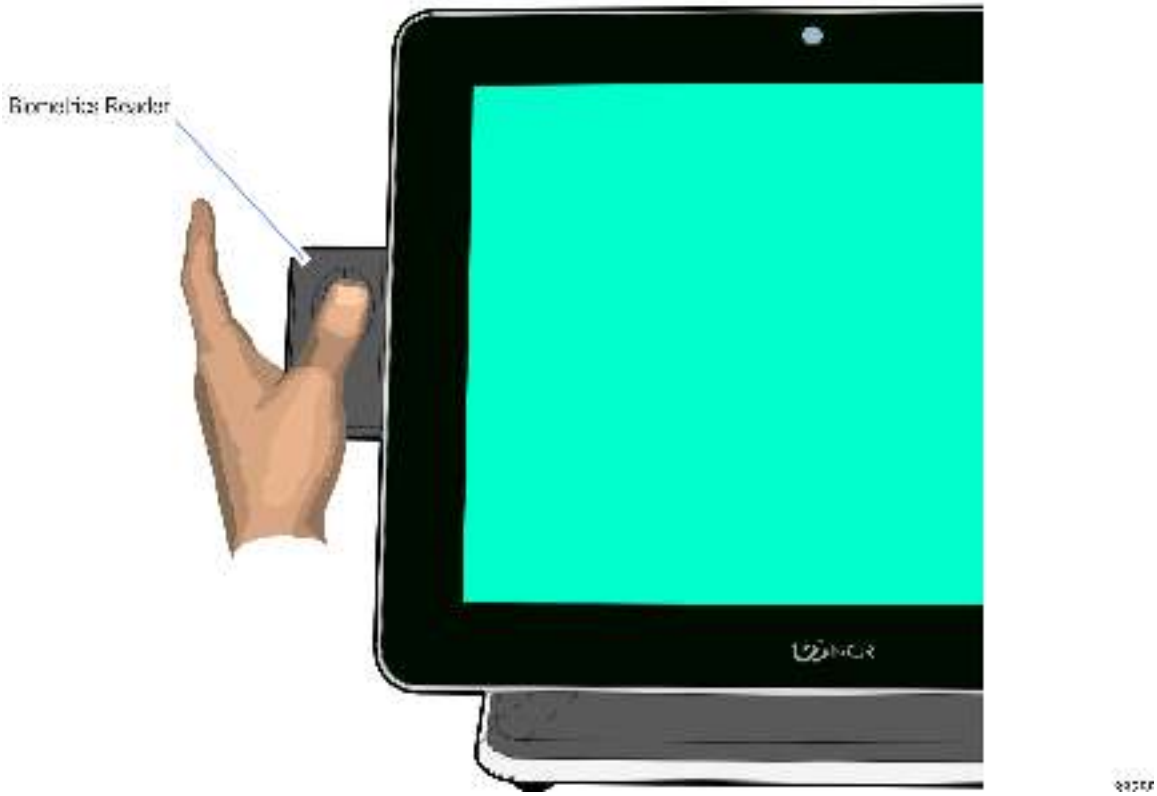

Under normal usage conditions dirt, residue, oils, and other materials can collect on users' fingers. This can possibly cause poor collection of fingerprint data, which can cause performance degradation. For the best results it is recommended that the user keep their fingers relatively clean and free of residues that may alter the sensor performance.

Adhesive tape can be used to clean fingers. Adhere the tape to the finger and then pull it off.

Software Drivers

The RealPOS biometrics reader is a *digitalPersona U.ARE.U 4500 Module*. Please visit the DigitalPersona web site for drivers and application developer tools.

https://www.digitalpersona.com/Fingerprint-Biometrics/OEM-Modules/U-are-U-4500-Module/

Cabinet Cleaning Procedures

1. Disconnect the unit from the power outlet before cleaning.
2. Use a cloth lightly dampened with a mild detergent.
3. Do not use alcohol (methyl, ethyl, or isopropyl) or any strong dis-solvent. Do not use thinner or benzene, abrasive cleaners, or compressed air.

Warning: Do not use any other types of cleaners such as vinegar, solvents, degreasers, or ammonia-based cleaners. These can damage the unit.

4. Avoid getting liquids inside the unit. If liquid does get inside, have a qualified service technician check it before you power it on again.
5. Remove external dust around the cooling vents.

Cleaning the Cooling Vents

The air vents on the side of the terminal should be cleaned periodically to maintain optimum cooling for the CPU.

Use the hose attachment on a standard household vacuum cleaner to remove the dust from the vents. Clean the exhaust vents on both sides of the terminal and the intake vent on the back of the terminal.

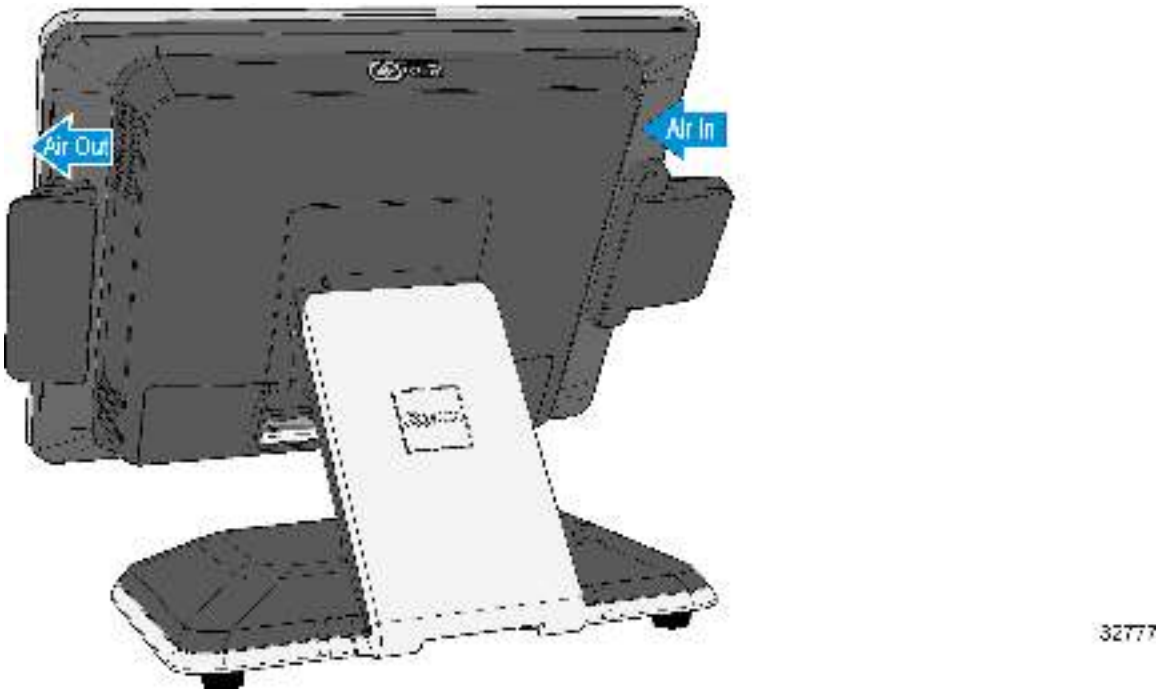

Chapter 4: Disk Image Backup and Recovery Tool

Introduction

This chapter discusses procedures on how to backup or recover the POS image. The terminal has a recovery tool that performs a complete backup of the whole HDD/SSD. This includes the operating system, all files, data and the database itself if it is installed on the HDD/SSD, making an exact duplicate of everything contained on the terminal.

The *Recovery Tool* uses the Windows Image (.WIM) file format to store the OS image. This is a file-based format for use with the ImageX and DISM tools that Microsoft created for use with Windows Vista and later OS versions. The format can also be used to capture and restore XP-based OS images. More information on the ImageX tool and .WIM format can be found at:
http://technet.microsoft.com/en-us/library/cc722145(WS.10).aspx

The *Recovery Tool* is designed to create a complete backup of, or restore, a previously saved image to the terminal.

The Recovery Tool offers the following functions and features:

- Multi-language support for the following languages EN; DE; FR; IT; ES.
- Check and Repair Disk
- Backup the System
- Restore the System to a previous state
- Password Protection
- Network support

You can save and restore your backup from different locations:

- Network
- USB Drive
- Hard Drive/Solid State Device (if present on the terminal)

Running the Recovery Tool

Starting the Recovery Tool

The Recovery Tool Button is located on the I/O Panel, next to the Power On/Off Button.

1. Begin with terminal OFF.
2. Using a pen, stylus, (or similar object) press (and hold) the recessed **Recovery Tool Button**. While holding the **Recovery Tool Button** momentarily press the **Power Button**.
3. Continue holding the **Recovery Tool Button** for 5 — 6 seconds.

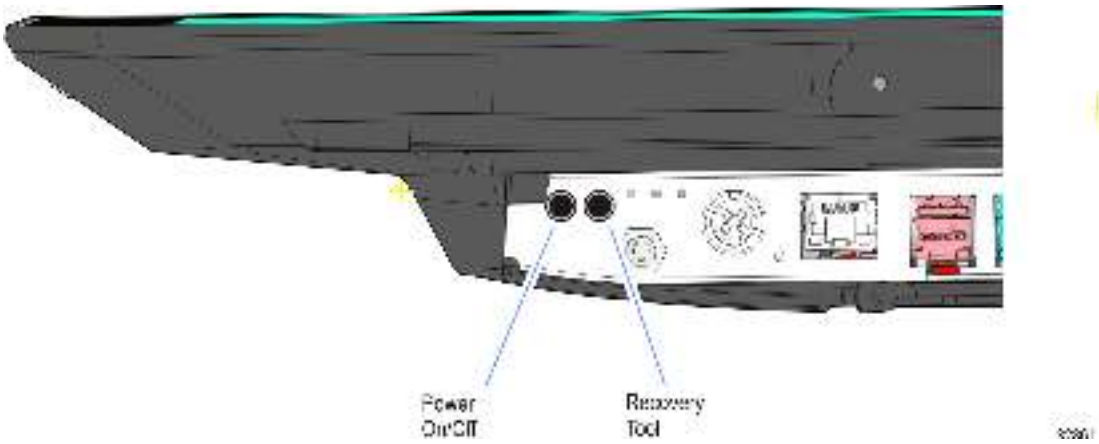

Main Screen

When the terminal boots the *Main Screen* is displayed.

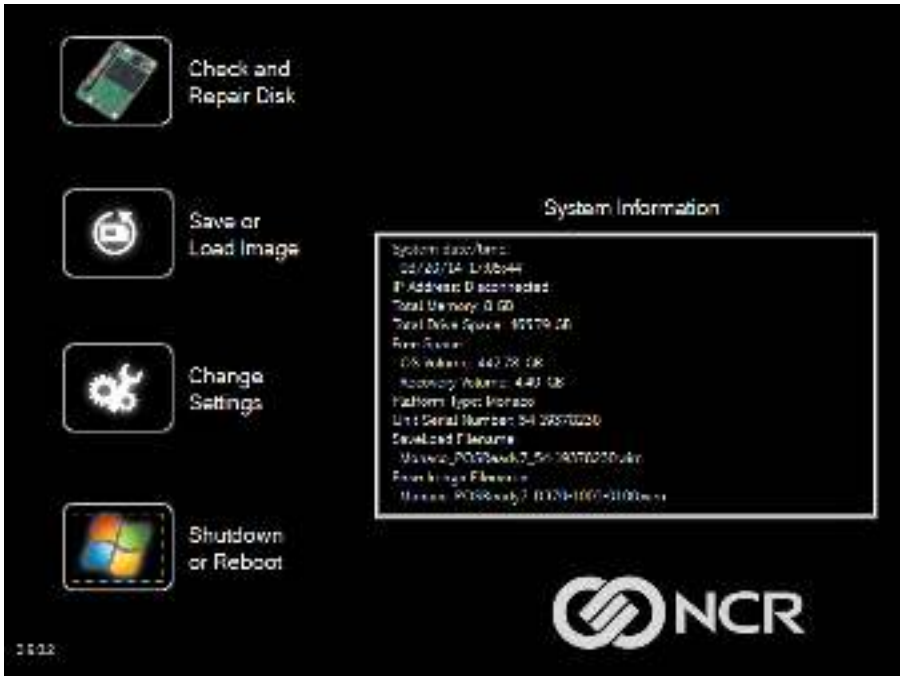

Check and Repair Disk

This button runs *Checkdisk*, which checks the consistency of the HDD/SSD and the Windows file system. Failures can occurs in the Windows file system and prevent Windows from starting. *Checkdisk* analyzes the failures and fixes them in most cases. This function runs in a Windows Command Box.

Save or Load Image

This button opens the *Backup and Recovery* screen.

Change Settings

This button opens a dialog screen to let you set/change the password and to configure the network settings.

Shutdown or Reboot

This button opens the screen to properly *Shutdown* and *Reboot* the POS.

System Information

This is where useful information of the POS is displayed, such as Serial Number and Image Names.

Save Or Load Image

This function is used to either *Save* or *Load* an image from a device.

1. On the *Main Screen,* click on **Save or Load Image.**

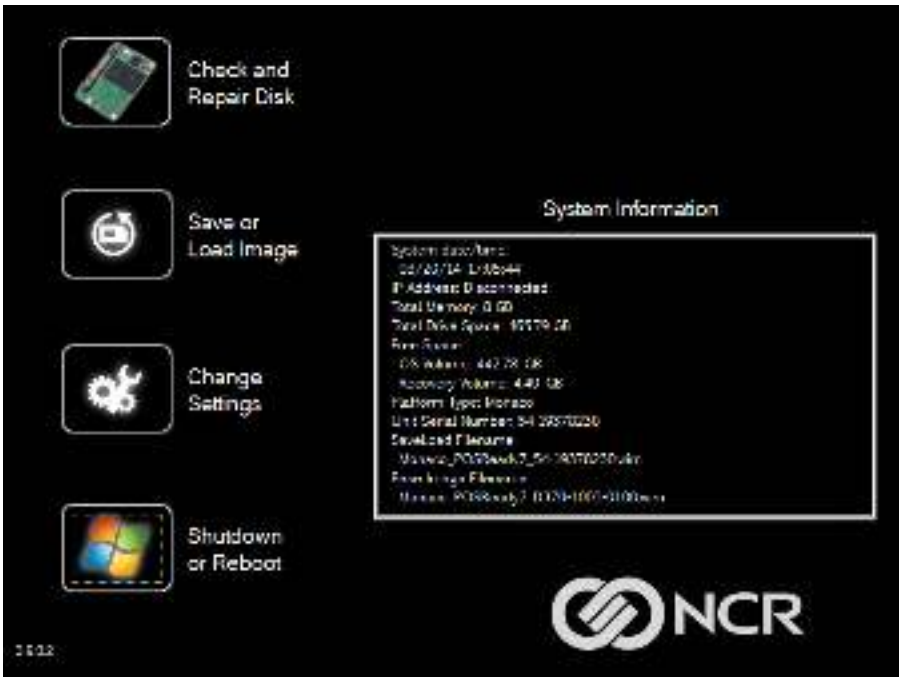

2. Enter the **Password**. The factory default password is **Recovery1234**.

Saving An Image

The *Select Image Location* screen displays a terminal with three sets of *In/Out* arrow buttons, indicating the direction of data flow when selected. Arrows pointing away from the terminal are used to *Save* images to a device. Arrows pointing towards the terminal are used to *Load* an image.

Recovery Partition Size

The size of the Recovery Partition is limited to 8GB on the local drive. The USB and network options can be used to store / backup larger images. The total size is comprised of the base factory image + the user and site backups and the roughly 300MB of space used by WinPE and apps. USB/Network backups are limited only by the hardware that they are being stored to.

After the factory image is copied into the Recovery Partition, there is approximately 3GB remaining in the 8GB partition. Any data stored as an incremental backup to this location is compressed. A typical, large POS software installation will not outpace the constraints of the local storage.

Backups to separate *slots* in the Recovery Tool only increase the total storage required by the amount of data *added* to the image. When the contents of the OS partition become too large to store in the 8GB local Recovery Partition then one of the alternate storage methods available (USB or network) should be used to store backups.

Output Options

There are three output options.

- Hard Disk Drive/Solid State Device
- USB Device
- Network

Note: Windows 7 images require a minimum of 4 GB available on the Network, Local Drive, or USB drive. POSReady requires a minimum of 2 GB. Make sure there is enough space is available on the storage media. Image sizes vary depending on applications and database sizes.

1. Click on the arrow which points to the desired output.

   Example: Click on the **USB Save Button**.

2. Click on the **USB Button**.

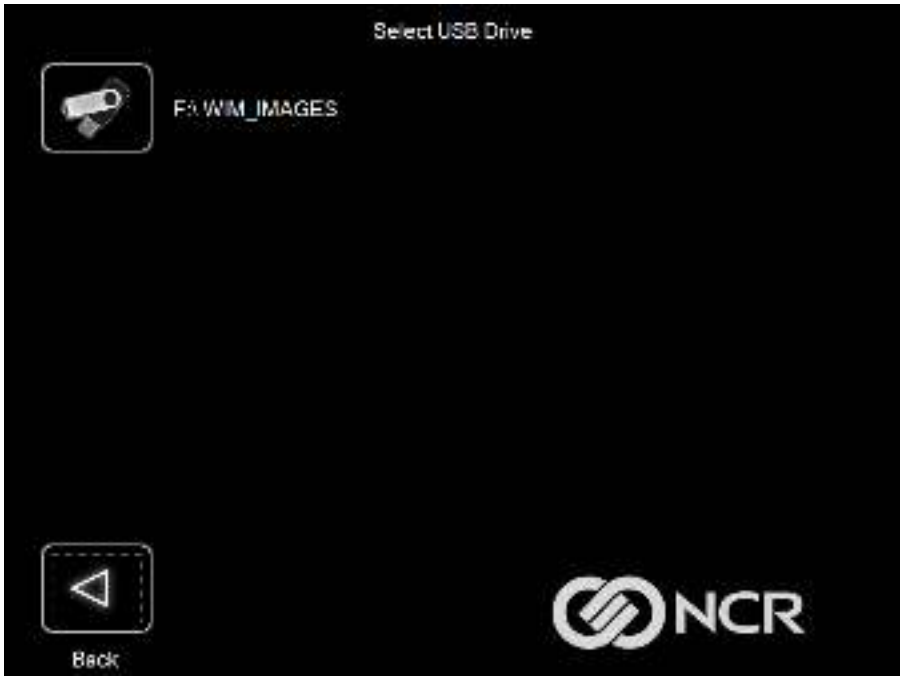

If this is the first backup performed on this POS then the image is automatically saved as a *Site* backup.

If a backup already exists then you have the choice of performing either a *Site* or *User* backup.

- **Site Image** - Use this option immediately after all application components have been loaded and setup for initial operation, or for base image updates.
- **User Image** - Use this option for routine day-to-day or periodical backups.

Note: *Site* and *User* backups are separate independent backups.

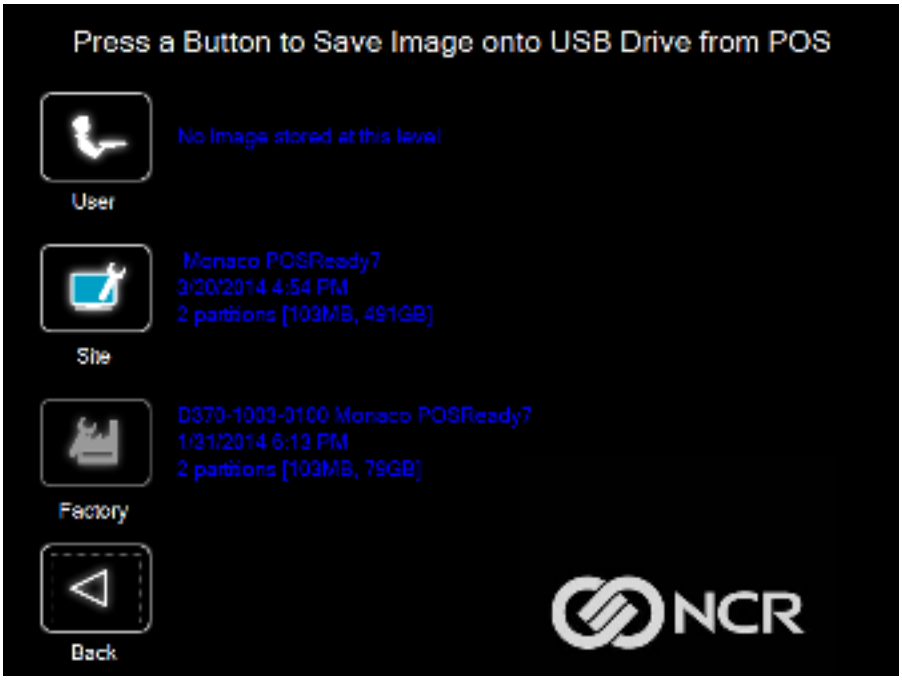

The image information is updated with the new image date.

Loading An Image

Caution: Do NOT remove power during an Image Load. Complete the Operating System setup and then shut down Windows properly. Removing power prematurely will corrupt the image display various messages about Windows failed to load or about missing or corrupt registry. If this happens you can do an Image load of the Factory image with the Recovery Tool.

1. Click on the arrow that points from the desired load device to the terminal.

   Example: Click on the **USBLoad Button**.

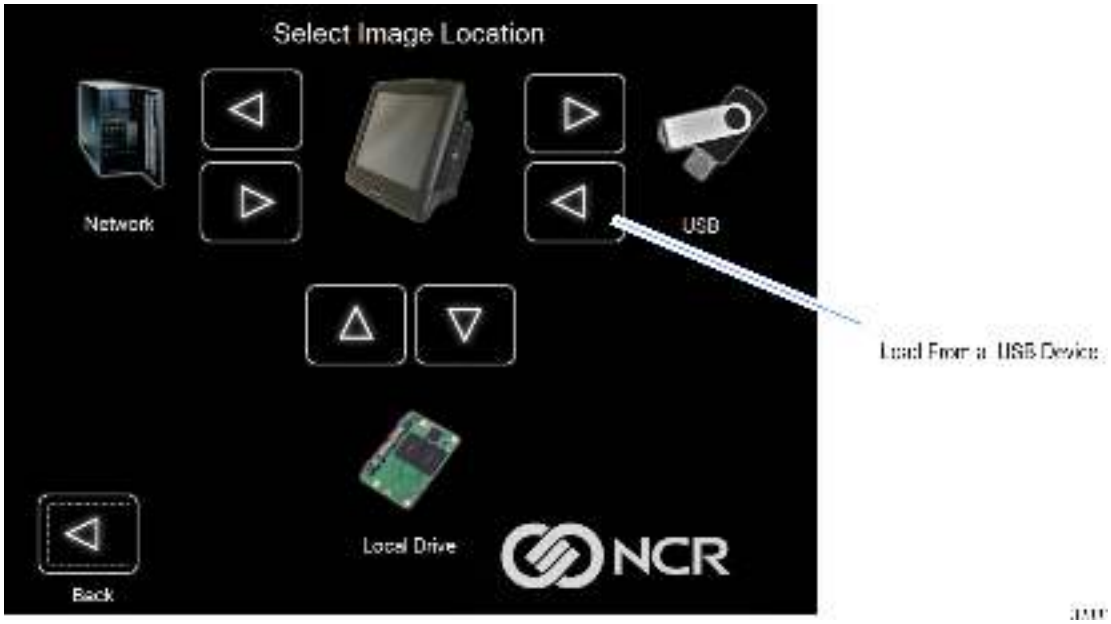

2. Click on the **USB Button**.

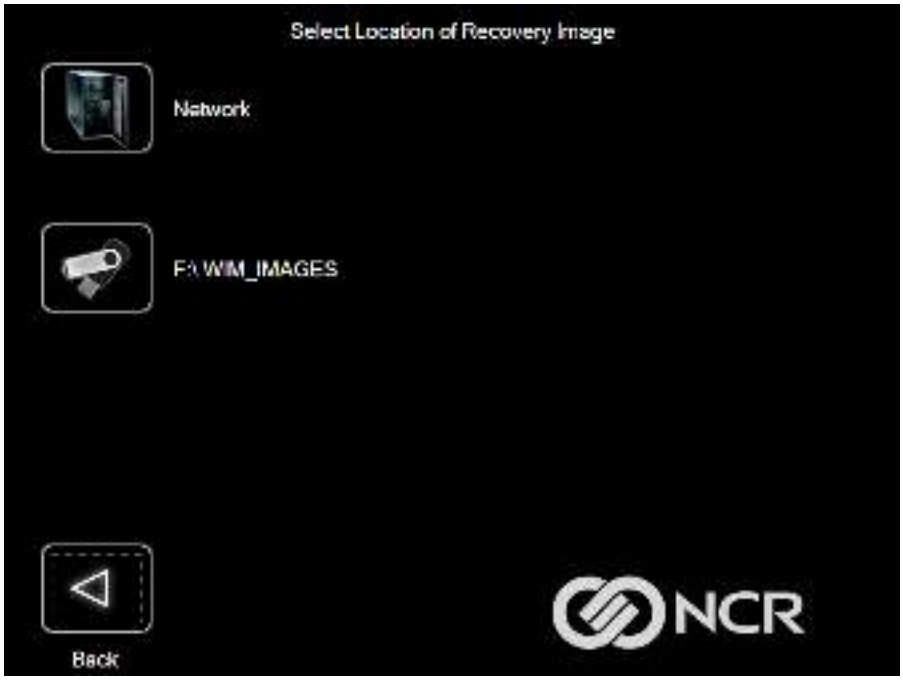

If you are loading from a network a dialog screen opens to *Select a Network Drive*.

3. Select the *Image Type*.
   - **User Image** - Most recent routine backup.
   - **Site Image** - Image of the terminal after application components were loaded.
   - **Factory Image** - This is the NCR Base Image as shipped from the factory.

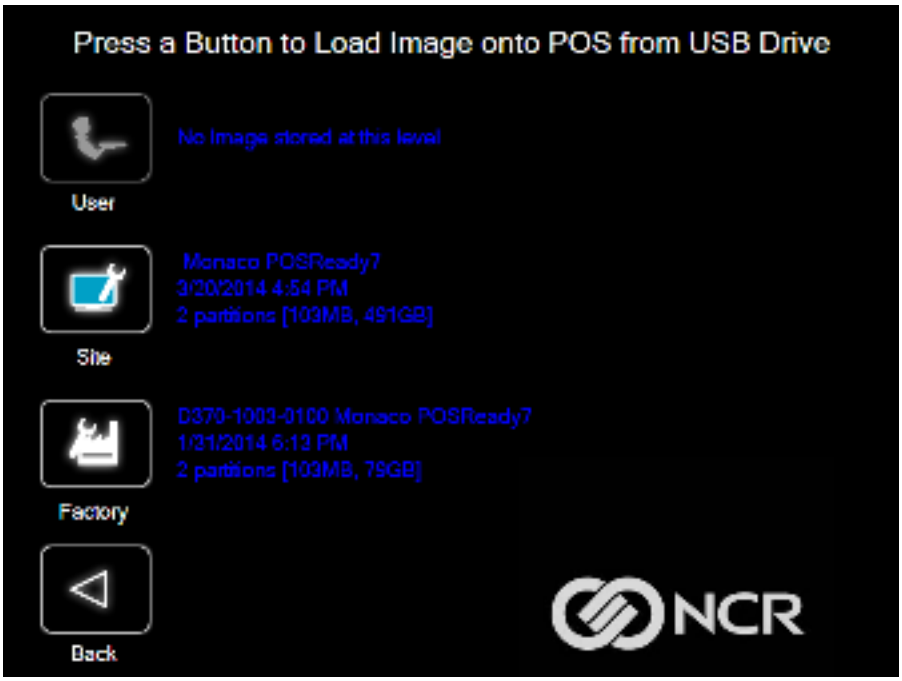

4. Click **Yes** to to apply the image.

Caution: All the information in the current productive/working image on the drive is lost with this operation!

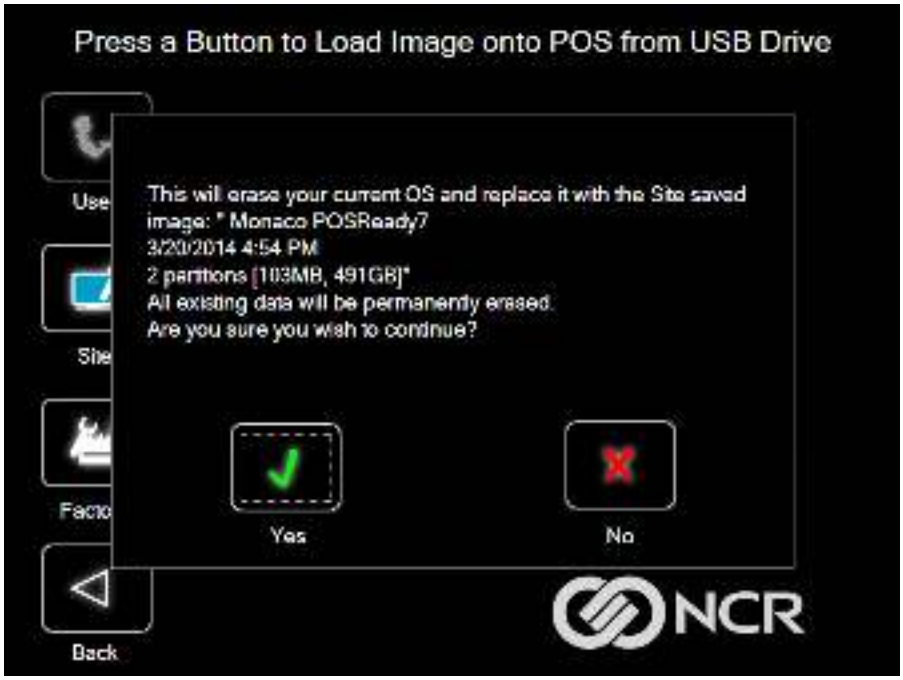

A progress bar is displayed as the image is applied.

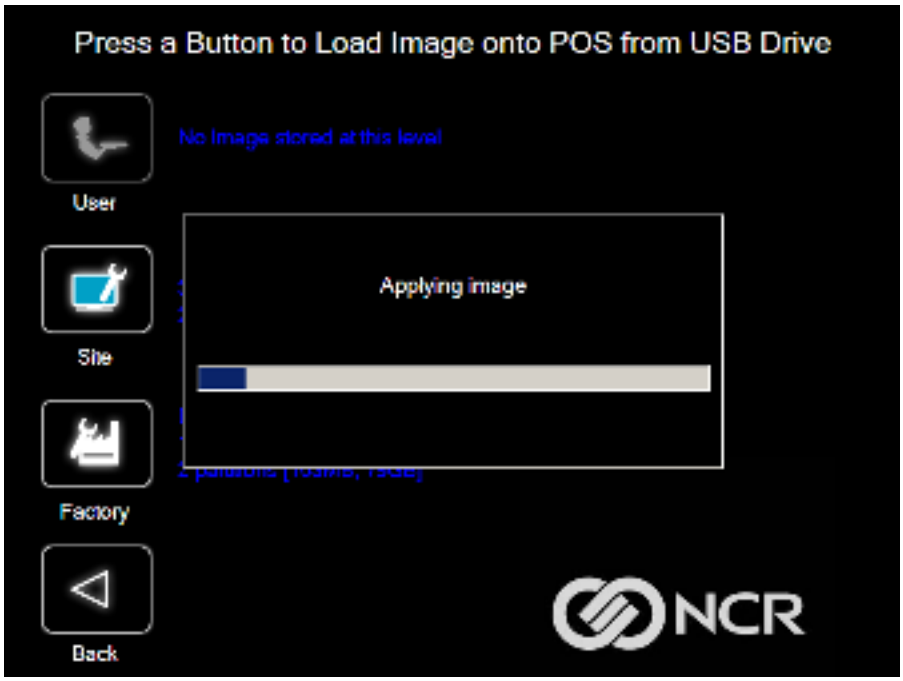

A message is displayed when the load is complete.

5. **Reboot** the POS.

Change Settings

On the *Main Screen,* click on **Change Settings.**

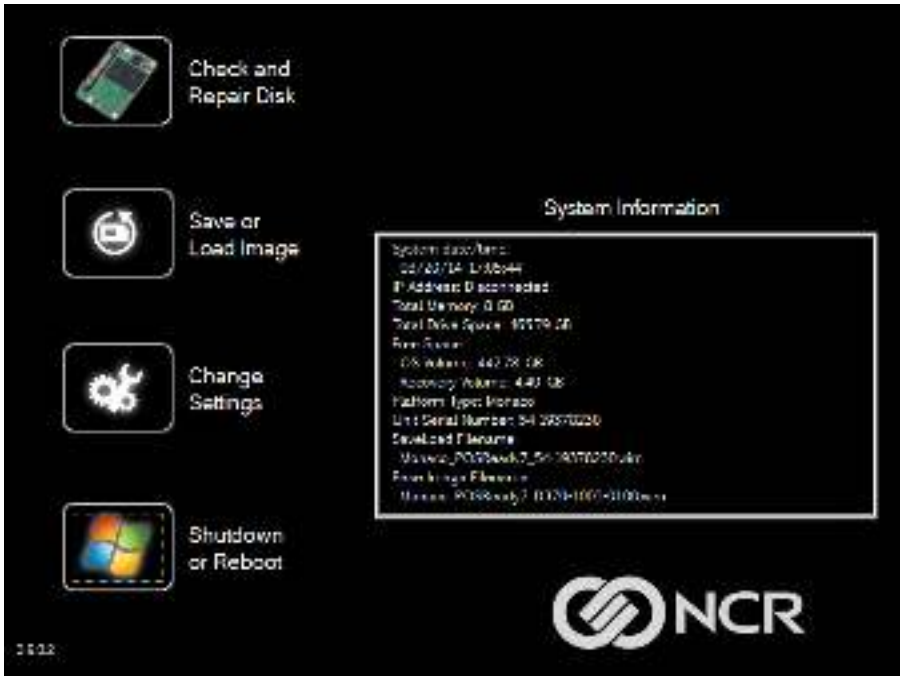

There are four functions available on the *Change Settings* screen.

- Change Network Settings
- Change Password
- Replace Recovery Image
- Change Language

Change Network Settings

1. On the *Change Settings Screen*, click on **Change Network Settings.**

2. Enter the **Password**.

3. Enter the network configuration settings and then click [**Enter**].

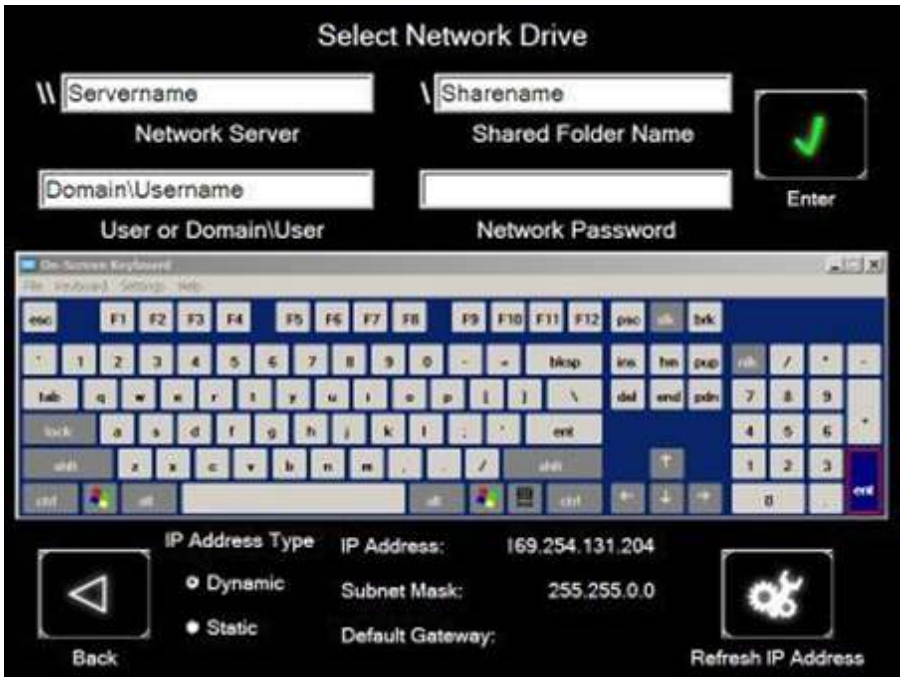

Change Password

1. On the *Change Settings Screen,* click on **Change Password**
2. Enter the new **Password**. Click [**Enter**].

If you have forgotten/lost the password you can click on Lost Password. A unique code is generated that you can provide to NCR Support to get a new temporary password.

Replace Recovery Image

This feature is used to update the *Recovery Tool* and the environment that it runs in.

1. On the *Change Settings Screen*, click on **Replace Recovery Image**.

2. Click on the source of the *Recovery Image*.

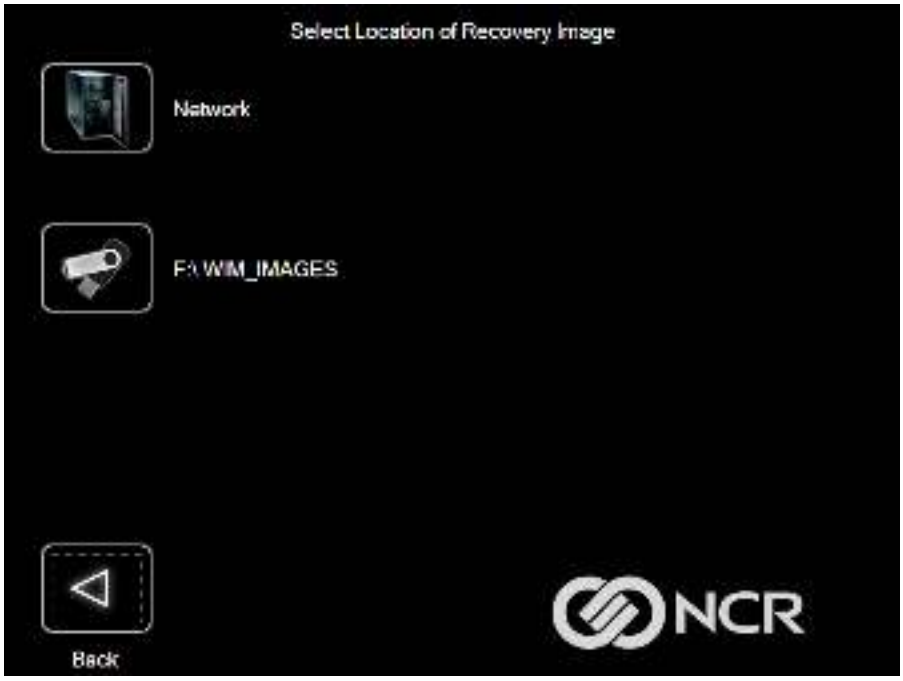

3. Complete the image replacement in the same manner as with the POS *Site/User* image restore procedures.

Change Language

1. On the *Change Settings Screen*, click on **Change Language**

2. Click on the language of choice.

Creating a Disk Image

This terminal has a *Recovery Button* that permits end users to quickly restore a disk back up from a hidden partition on the NCR system storage. To utilize this valuable feature the image must be created using NCR tools. Tools are available from NCR at:

http://www5.ncr.com/support/support_drivers_patches_radiant.asp?Class=Hospitality/GenDrivers_display

At this site download the following:

- *ImagingSuite_3.8.0.5.zip* (or later) - The Imaging Suite package consists of a three primary parts:
  - A Server application for local area network imaging
  - A Client application that runs on the target or source machine where images will be applied to or captured from
  - A customized version of Windows PE 5.0 boot OS environment from which the client application will be run
- *Imaging Suite User Guide* - This document provides a general overview of the Imaging Suite package, how to configure the system to run it, and how to use the applications to capture and apply system images.

Chapter 5: Power Management

The BIOS supports the Advanced Configuration and Power Management Interface (ACPI) 4.0 specification. A key feature of ACPI is that the operating system, not the BIOS, configures and implements power management. The 7701 terminal supports the Global system power states defined by ACPI.

Computer States

G3 Mechanical Off

A computer state that is entered and left by a mechanical means

Example: Turning off the system's power through the movement of a large red switch.

Various government agencies and countries require this operating mode. It is implied by the entry of this off state through a mechanical means that no electrical current is running through the circuitry and that it can be worked on without damaging the hardware or endangering service personnel. The OS must be restarted to return to the Working state. No hardware context is retained. Except for the real-time clock, power consumption is zero.

G2/S5 Soft Off

A computer state where the computer consumes a minimal amount of power. No user mode or system mode code is run. This state requires a large latency in order to return to the Working state. The system's context will not be preserved by the hardware. The system must be restarted to return to the Working state. It is not safe to disassemble the machine in this state.

G1 Sleeping

A computer state where the computer consumes a small amount of power, user mode threads are not being executed, and the system appears to be off (from an end user's perspective, the display is off, and so on). Latency for returning to the Working state varies on the wake environment selected prior to entry of this state (for example, whether the system should answer phone calls). Work can be resumed without rebooting the OS because large elements of system context are saved by the hardware and the rest by system software. It is not safe to disassemble the machine in this state.

Go Working

A computer state where the system dispatches user mode (application) threads and they execute. In this state, peripheral devices (peripherals) are having their power state changed dynamically. The user can select, through some UI, various performance/power characteristics of the system to have the software optimize for performance or battery life. The system responds to external events in real time. It is not safe to disassemble the machine in this state.

ACPI Sleep States (S0 - S5)

Under the G1 sleeping state ACPI defines levels of system sleep state support. The 7701 supports the following sleeping states:

- S0: Normal Powered-On state
- S1 (Standby): The S1 sleeping state is a low wake latency sleeping state. In this state, no system context is lost (CPU or chip set) and hardware maintains all system contexts.

Note: The 7701 does not support S1 state. Turning off the backlight and hard drives provides the equivalent power savings (due to Intel's processor C-states feature) at nearly zero latency.

- S2: Not supported
- S3 (Suspend to Ram): The S3 sleeping state is a low wake latency sleeping state. This state is similar to the S1 sleeping state except that the CPU and system cache context is lost (the OS is responsible for maintaining the caches and CPU context). Control starts from the processor's reset vector after the wake event. In NCR systems, during S3, power is only provided to the USB 3.0 ports.

Note: When the terminal resumes from an S3 state, all the USB devices re-enumerate. This causes speaker tones as if they were disconnected and then reconnected. This does not present a problem and the USB devices will continue to operate correctly.

Requirements for S3 support:

- O/S must be built on a system with S3 enabled in the BIOS
- Some peripherals may not be S3 capable, which can prevent the system from entering S3 state.

- "S4 (Suspend to Disk): The S4 state is the lowest power, longest wake latency sleeping state supported by ACPI. In order to reduce power to a minimum, it is assumed that the hardware platform has powered off all devices. Platform context is maintained.

Requirements for S4 support:

- O/S must be built on a system with S3 enabled in the BIOS
- Some peripherals may not be S4 capable, which can prevent the system from entering S4 state.

Reference the *ACPI Specification* for details.

***Peripherals**:* ACPI defines power states for peripherals which are separate from the system power state. The device power states range from D0 (fully-on) to D3 (off) It is the responsibility of the driver developer for each peripheral to define and support the available power states.

Power State	S0 Working	S0 Idle, Backlight Off, HDD Off	**S3 Suspend to RAM	S4 Hibernate	**S5 Soft Off
Supported: Y / N	Y	Y	Y	Y	Y
Description	Fully Functional	-Video back light off -HDD off	-Video back light off -HDD off -Cache Flush -Memory in slow refresh -CPU halted	-Video back light off -HDD off -Cache flush -Memory data to HDD -CPU halted	OFF **Note:** Some devices remain powered by standby voltage (LAN, ME-AMT, USB) to allow wake-up
Power Supply Status	On	On	Powered Down*	Powered Down*	Powered Down*
Power Consumption* Celeron N3150	15 W	5 W	2 W	2 W	2 W
Wake Options					
Power Switch	N/A	Y	Y	Y	Y
Touch	N/A	Y	Y	N	N
USB Keyboard	N/A	Y	Y	N	N

Power State	S0 Working	S0 Idle, Backlight Off, HDD Off	**S3 Suspend to RAM	S4 Hibernate	**S5 Soft Off
USB Mouse	N/A	Y	Y	N	N
LAN (magic packet)	N/A	Y	Y	Y	Y
RTC Alarm	N/A	Y	Y	Y	Y
Serial Port (RI)	N/A	Y	N	N	N

Note: Power consumption based on the following configuration: 4GB RAM, 500 GB HDD, Display full brightness, with integrated 5977 display

*Maintains small voltage to support wake circuits

Enabling Wake on LAN

In order for Wake on LAN to function the Network driver must be enabled (factory default). The procedure for enabling the driver depends on which operating system you are using.

Windows 7

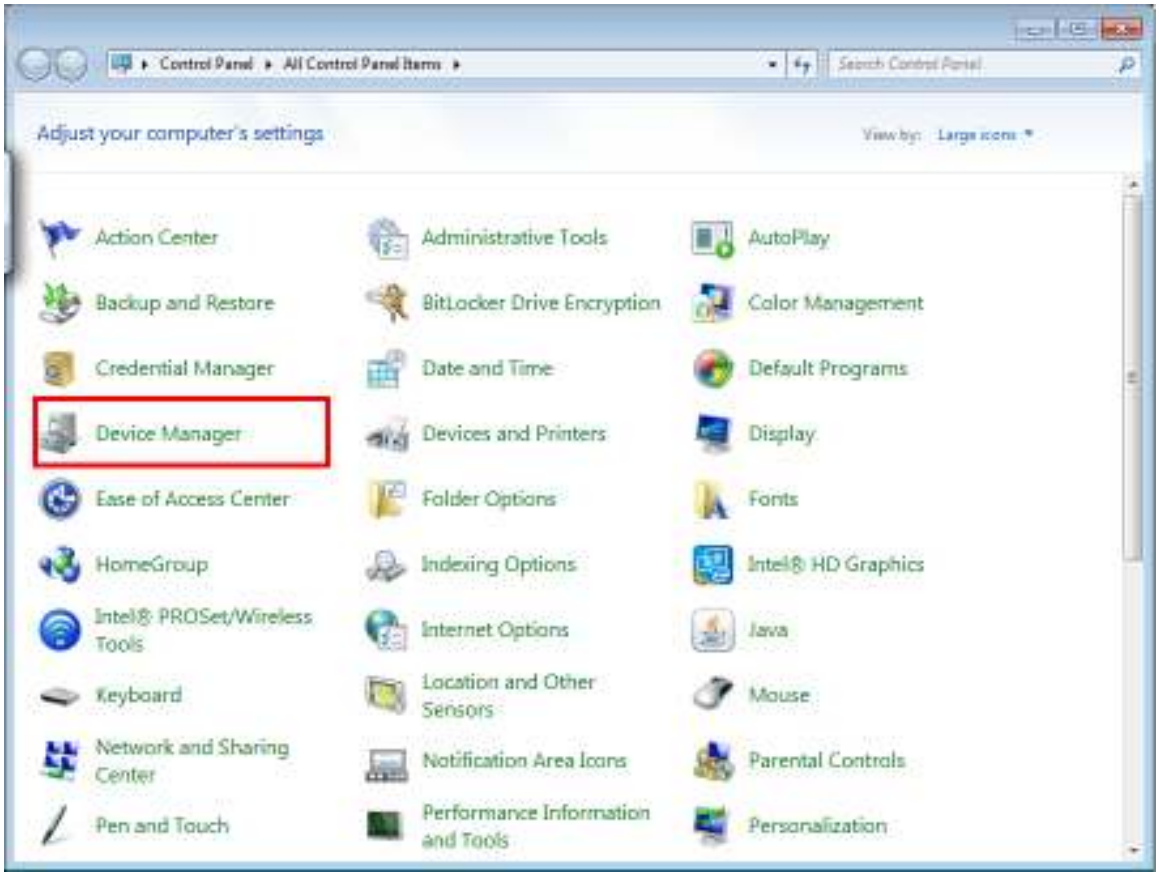

1. **Control Panel** >> **Device Manager**

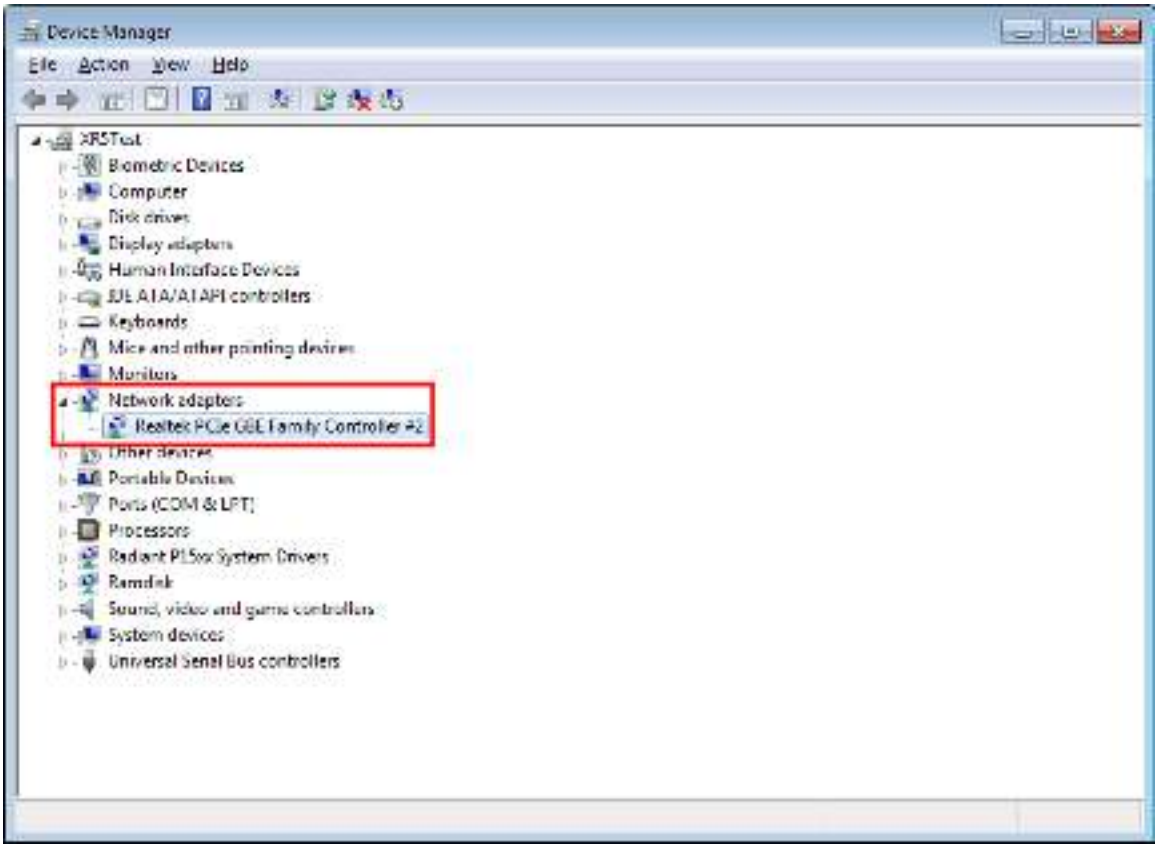

2. Select **Network Adapters**>>**Realtek PCIe GBE Family Controller #2**

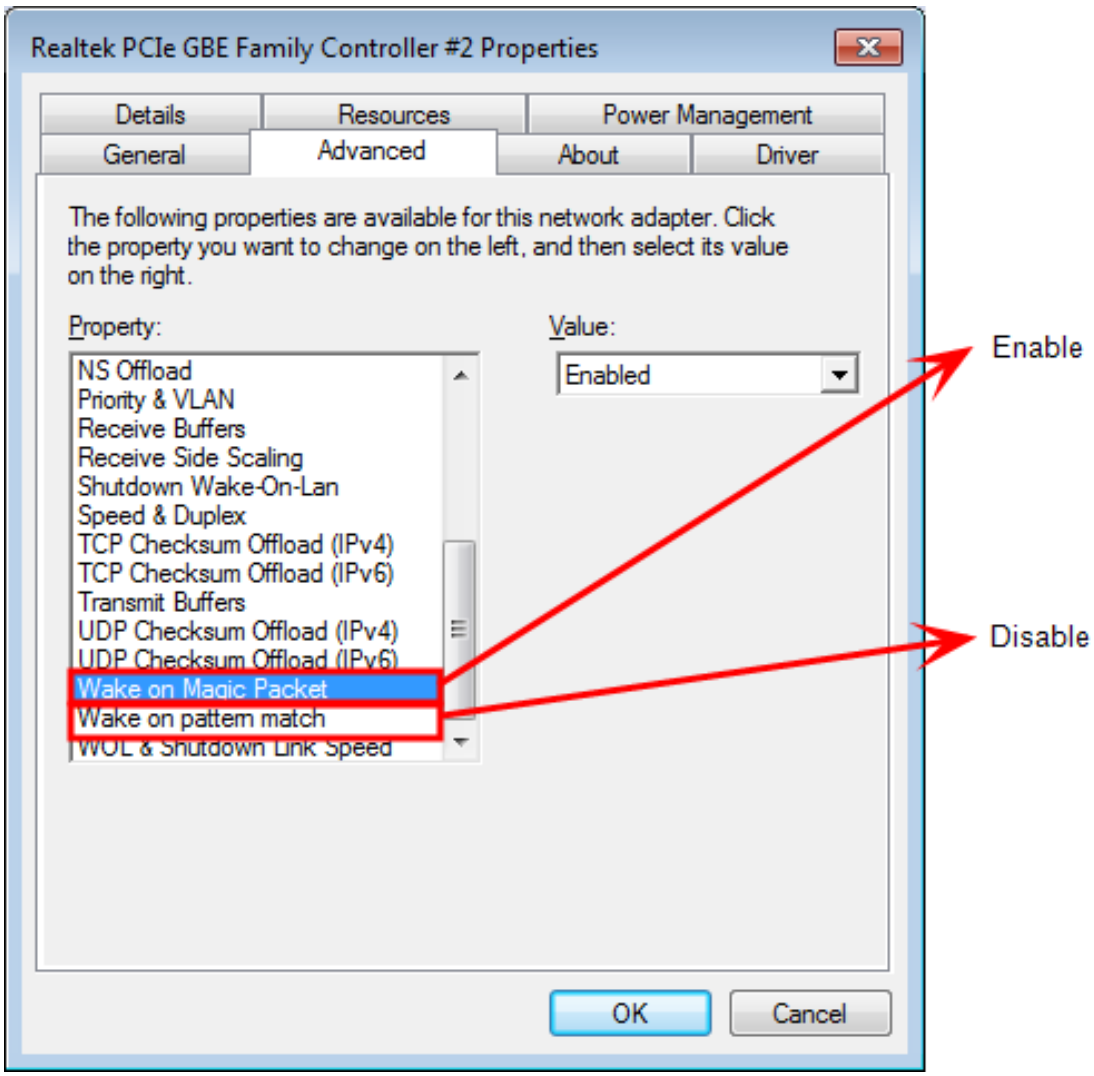

3. In the **Advanced** tab select **Wake on Magic Packet** and verify it is enabled.
4. In the **Advanced** tab select **Wake on pattern match** and verify it is disabled.

ACPI Processor C-States

ACPI defines the power state of system processors while in the G0 working state as being either active (executing) or sleeping (not executing). Processor power states are designated C0, C1, C2, C3, …Cn.

The C0 power state is an active power state where the CPU executes instructions. The C1 through Cn power states are processor sleeping states where the processor consumes less power and dissipates less heat than leaving the processor in the C0 state.

While in a sleeping state, the processor does not execute any instructions. Each processor sleeping state has a latency associated with entering and exiting that corresponds to the power savings. In general, the longer the entry/exit latency, the greater the power savings when in the state.

To conserve power, OSPM places the processor into one of its supported sleeping states when idle. While in the C0 state, ACPI allows the performance of the processor to be altered through a defined "throttling" process and through transitions into multiple performance states (P-states).

Note: The 7701 processors supports C0 and C1 states. Support of deeper sleep states is not required due to its inherently low power consumption.

Chapter 6: BIOS Setup

Entering Setup

1. Connect an alphanumeric USB keyboard to the terminal.
2. Apply power to the terminal.
3. When you see the NCR logo displayed press [**Del**].

How to Select Menu Options

The following keyboard controls are used to select the various menu options and to make changes to their values.

- Use the arrow keys to select (highlight) options and menu screens.
- Use the [**Enter**] key to select a submenu.
- Use the [**+**] and [**-**] keys to change field values.
- To view help information on the possible selections for the highlighted item, press [**F1**].
- To save the changes, move the cursor to the *Exit Menu*, select either **Save Changes & Exit** *or* **Save Changes**, and press [**Enter**].

Restoring Factory Settings

To reset all values to their default settings for the **current screen**, press [**F9**] and then [**Enter**] when the confirmation message is displayed. The terminal automatically loads the BIOS default values. To reset all BIOS settings to their default settings go to the Exit menu, press F9, select either **Save Changes & Exit** *or* **Save Changes**, and press [**Enter**].

Note: The Motherboard is used on other products and has a jumper that is used to select the proper BIOS defaults. If the Motherboard is replaced be sure this jumper is set to the RSD setting.

BIOS Default Settings

NCR BIOS Version: 9.0.7.0

Main Menu

Keyboard Layout	(variable)
System Language	(variable)
System Time	(variable)
System Date	(variable)

Advanced Menu

▸ACPI Settings	
Enable ACPI Auto Configuration	[Disabled]
Enable Hibernation	[Enabled]
ACPI Sleep State	[S3 only(Suspend to ...]
Lock Legacy Resources	[Disabled]
S3 Video Repost	[Disabled]
▸S5 RTC Wake Settings	
Wake System with Fixed Time	[Disabled]
Wake System with Dynamic Time	[Disabled]
▸Trusted Computing	
Security Device Support	[Enabled]
▸NCR POS	
Port CF9 Full Reset	[Disabled]
ACPI S5 Shutdown	[Enabled]
F8 BBS Boot Menu	[Enabled]
Video Delay in Seconds:	[5]
Logo Display	[Logo]

▸**CPU Configuration**	
Hyper-threading	[Enabled]
Active Processor Cores	[All]
Limit CPUID Maximum	[Disabled]
Execute Disable Bit	[Enabled]
Intel Virtualization Technology	[Enabled]
Hardware Prefetcher	[Enabled]
Adjacent Cache Line Prefetch	[Enabled]
EIST	[Enabled]
. Package power limit lodck	[Enabled]
. Cpu Power Limit1	0
. Cpu Power Limit1 Time	0
. Cpu Power Limit2	0
. Platform power limit lock	[Enabled]
. Cpu Power Limit3	0
. Cpu Power Limit3 Time	0
. Cpu Power Limit3 Duty Cycle	0
. DDR Power Limit1	0
. DDR Power Limit1 Time	0
. DDR Power Limit2	0
. 1-Core Ratio Limit	[Enabled]
. 2-Core Ratio Limit	0
VR Current value lock	[Enabled]
VR Current value	0
CPU C states	[Enabled]
. Enhanced C1 state	[Enabled]
. CPU C3 Report	[Enabled]
. CPU C6 report	[Enabled]

. . C6 Latency	[Short]
. . CPU C7 report	[CPU c7x]
. . . C7 Latency	[Long]
. . C1 state auto demotion	[Enabled]
. . C3 state auto demotion	[Enabled]
. . Package C state demotion	[Disabled]
. . C1 state auto undemotion	[Enabled]
. . C3 state auto undemotion	[Enabled]
. . Package C state undemotion	[Disabled]
. . C state Pre-Wake	[Enabled]
CFG lock	[Enabled]
Package C State limit	[Auto]
LakeTiny Feature	[Disabled]
TCC Activation Offset	0
ACPI T State	[Disabled]
CPU DTS	[Disabled]
Debug Interface	[Disabled]
Debug Interface Lock	[Disabled]
IOUT OFFSET Sign	0
IOUT OFFSET	0
IOUT Slope	512

▸SATA Configuration	
SATA Controller(s)	[Enabled]
SATA Mode Selection	[RAID]
SATA Test Mode	[Disabled]
Aggressive LPM Support	[Enabled]
SATA Controller Speed	[Default]
▸Software Feature Mask Configuration	
. RAID0	[Enabled]
. RAID10	[Enabled]
. RAID5	[Enabled]
. Intel Rapid Recovery Technology	[Enabled]
. OROM UI and BANNER	[Enabled]
. HDD Unlock	[Enabled]
. LED Locate	[Enabled]
. IRRT Only on eSATA	[Enabled]
. Smart Response Technology	[Enabled]
. OROM UI Delay	[2 Seconds
Alternate ID	[Disabled]
Serial ATA Port 0 - 5	
. Port 0 - 5	[Enabled]
. Mechanical Presence Switch	[Disabled]
. Hot Plug	[Enabled]
. External SATA	[Disabled]
. SATA Device Type	[Hard Disk Drive]
. Spin Up Device	[Disabled]

▸**AMT Configuration**	
Intel AMT	[Enabled]
BIOS Hotkey Pressed	[Disabled]
MEBx Selection Scr3een	[Disabled]
Hide Un-Configure ME Confirmation	[Disabled]
MEBx Debug Message Output	[Disabled]
Un-Configure ME	[Disabled]
AMT Wait Timer	0
Disable ME	[Disabled]
ASF	[Enabled]
Activate Remote Assistance Process	[Disabled]
USB Configure	[Enabled]
Pet Progress	[Enabled]
WatchDog	[Disabled]
▸ **Info Report Configuration**	
Summary Screen	[Disabled]

▸HDD S.M.A.R.T. Status	
SATA Port0	ST500VT000-1DK
SMART Status	Supported/OK
SMART Port1	Not Present
SMART Status	N/A
▸USB Configuration	
Legacy USB Support	[Enabled]
USB3.0 Support	[Enabled]
XHCI Hand-off	[Enabled]
EHCI Hand-off	[Disabled]
USB Mass Storage Driver Support	[Enabled]
Port 60/64 Emulation	[Enabled]
US B transfer time-out	[20 sec]
Device reset time-out	[20 sec]
Device power-up delay	[Auto]
▸ SMART Settings	
SMART Self Test	[Disabled]
▸ Super IO Configuration	
▸ *Serial Port 1/A Configuration*	
. Serial Port	[Enabled]
. I/O Base Address	[0x3F8]
. IRQ	[IRQ4]

▸**H/W Monitor**	
CPU Smart Fan Mode	[Automatic Mode]
Fan OFF/Idle Temperature Limit	10
Fan Speedup Temperature Limit	40
Fan Startup RWM	50
PWM Slope	[2 PWM]
Hardware Health Monitoring	Typical (*Acceptable Range, Sitting Idle at room temperature*)
5V/12V VR Temperature	+55° C
Chassis Inlet	+55° C
Fan Inlet	+55° C
CPU Fan Speed	720 RPM (500 - 7260)
VCORE	+1.728 V (1.50 - 1.95)
VDIMM	+1.512 V (1.425 - 1.575)
+12V	+12.024 V (11.4 - 12.6)
+5V	+5.040 V(4.75 - 5.25)
+3.3V	+3.412 V (3.135 - 3.465)
+5v Dual	+4.980 V (4.75 - 5.25)
VBAT	+3.240 V
▸**Serial Port Console Redirection**	
Console Redirection	[Enabled]
▸ *Console Redirection Settings*	▸ *Console Redirection Settings*
. Out-of-Band Mgmt Port	[COMO (Disabled)]
. Terminal Type	[VT-UTF8]
. Bits per second	[115200]
. Flow Control	[None]

▸**Network Stack**	
Network Stack	[Disabled]
▸ **Intel(R) Ethernet Network Connection 1217-LM - 00:23:24:...**	
▸ *NIC Configuration*	
. Link Speed	[AutoNeg]
. Wake on LAN	[Enabled]
. Blink LEDs 9range 0-15 seconds)	0
. Link Status	[Disconnected]

Chipset Menu

▸ **PCH-IO Configuration**	
▸*PCI Express Configuration*	
. PCI Express Clock Gating	[Enabled]
. DMI Link ASPM Control	[Enabled]
. DMI Link Extended Synch Control	[Disabled]
. PCIe-USB Glitch W/A	[Disabled]
. PCIE Root Port Function Swapping	[Disabled]
. Subtractive Decode	[Disabled]
▸ *PCI Express Root Ports 1 - 8*	
. PCI Express Root Port *n*	[Enabled]
. ASPM Support	[Auto]
. L1 Substates	[L1.1 & L1.2]
. . URR	[Disabled]
. . FER	[Disabled]
. . NFER	[Disabled]
. . CER	[Disabled]
. . CTO	[Disabled]
. . SEFE	[Disabled]
. . SENFE	[Disabled]
. . SECE	[Disabled]
. . PME SCI	[Enabled]
. . Hot Plug	[Disabled]
. PCIe Speed	[Auto]
. Detect Non-Compliance Device	[Disabled]
. Extra Bus Reserved	0
. Reserved Memory	10
. Prefetchable Memory	10
. Reserved I/O	4 (Ports 1-6), 8 (7-8)

. PCIE LTR	[Enabled]
. PCIE LRT Lock	[Enabled]
. Snoop Latency Override	[Auto]
. Non Snoop Latency Override	[Auto]
▸ *USB Configuration*	
USB Precondition	[Disabled]
XHCI Mode	[Auto]
BTCG	[Enabled]
USB Ports Per-Port Disable Control	[Disabled]
USB Ports Per-Port Disable Control (when Enabled)	
. Internal USB: Left [Biometric]	[Enabled]
. Internal USB: Top [Touch]	[Enabled]
. Internal USB: Right [MSR]	[Enabled]
. Internal USB: Top Left [Camera]	[Enabled]
. Internal USB: top right	[Enabled]
. USB 12V Portr C	[Enabled]
. USB 12V Portr D	[Enabled]
. USB 12V Portr E	[Enabled]
. USB 12V Portr F	[Enabled]
. USB Dual Connector - Port B	[Enabled]
. USB Dual Connector - Port B	[Enabled]
. USB Dual Connector - Port A	[Enabled]
. USB 3.0 Dual Connector - Port B	[Enabled]
. USB 3.0 Dual Connector - Port A	[Enabled]

▸ *PCH Azalia Configuration*	
Azalia	[Auto]
. Azalia Docking Support	[Enabled]
. Azalia PME	[Disabled]
▸ *BIOS Security Configuration*	
. SMI Lock	[Enabled]
. BIOS Lock	[Disabled]
. GPIO Lock	[Disabled]
. BIOS Inerface Lock	[Enabled]
. RTC RAM Lock	[Disabled]
PCH LAN Controller	[Enabled]
. Wake on LAN	[Disabled]
Restore AC Power Loss	[Last State]

▸ **System Agent (SA) Configuration**	
▸ *Graphics Cponfiguration*	
. Graphics Turbo IMON Current	31
. . Primary Display	[Auto]
. . Primary PEG	[Auto]
. . Primary PCIE	[Auto]
. Internal Graphics	[Auto]
. Aperature Size	[256MB]
. DVMT Pre-Allocated	[32M]
. DVMT Total Gfx Mem	[256M]
. Gfx Low Power Mode	[Enabled]
. Panel Power Enable	[Disabled]
. ▸ *LCD Control*	
. . Primary IGFX Boot Display	[VBIOS Default]
. . LCD Panel Type	[VBIOS Default]
. . SDVO-LFP Panel Type	[VBIOS Default]
. . Panel Scaling	[Auto]
. . Backlight Control	[PWM Normal]
. . BIA	[Auto]
. . Spread Spectrum clock Chip	[Off]
. . TV1 Standard	[VBIOS Default]
. . TV2 Standard	[VBIOS Default]
. . ALS Support	[Disabled]
. . Active LFP	[eDP Port-A]
. . Panel Color Depth	[18 Bit]

▸ *Memory Configuration*	
.DIMM profile	[Default DIMM profile]
. Memory Frequency Limiter	[Auto]
. ECC Support	[Enabled]
. Max TOLUD	[Dynamic]
. Enh Interleave Support	[Enabled]
. RI Support	[Enabled]
. DLL Weak Lock Support	[Enabled]
. Mc Lock	[Enabled]
. Ch Hash Support	[Enabled]
. Ch Hash Mask	12494
. Ch Hash Interleaved Bit	[Bit07]
. NMode Support	[Auto]
. Memory Scrambler	[Enabled]
. RMT Crosser Support	[Disabled]
. MRC Fast Boot	[Enabled]
. DIMM Exit Mode	[Auto]
. Memory Remap	[Enabled]
. Channel A DIMM Control	[Enable Both DIMMS]
. Channel B DIMM Control	[Enable Both DiMMs]
. GDXC Support	[Disabled]

Boot Menu

Setup Prompt Timeout	1
Bootup NumLock State	[On]
Quiet Boot	[Enabled]
Fast Boot	[Disabled]
Boot mode select	[Legacy]
FIXED BOOT ORDER Priorities	
Boot Option #1	[Hard Disk:ST500VT00. . .]
Boot Option #2	[CD/DVD]
Boot Option #3	[USB Hard Disk]
Boot Option #4	[USB CD/DVD]
Boot Option #5	[USB Key]
Boot Option #6	[USB Floppy]
Boot Option #7	[Network:IBA GE Slot . . .]
▸ ***CSM16 Parameters***	
. GateA20 Active	[Upon Request]
. Option ROM Messages	[Force BIOS]
. INT19 Trap Response	[Immediate]
▸ ***Hard Disk Drive BBS Priorities***	
. Boot Option #1	[ST500T000-1DK142]
▸ ***NETWORK Drive BBS Priorities***	
. Boot Option #1	[IBA GE Slot 00C8 v1410]

Security Menu

Supervisor Password is:	Cleared
User Password is:	Cleared
▸ **Secure Boot menu**	
Secure Boot Control	[Enabled]
Secure Boot Mode	[Standard]
▸ *Image Excution Policy*	
. Internal FVV	[Always Execute]
. Option ROM	[Deny Execute]
. Removable Media	[Deny Execute]
. Fixed Media	[Deny Execute]
▸ *Key Management*	
Factory Default KeyProvisioning	[Disabled]
. ▸ *Install All Factory Default Keys*	Yes/No
. ▸ *Set new PK*	Yes/No
. ▸ *Set new KIK*	Yes/No
. ▸ *Append Var to KEK*	Yes/No
. ▸ *Set new DB*	Yes/No
. ▸ *Append Var to DB*	Yes/No
. ▸ *Delete DBX*	Yes/No
. ▸ *Set new DBX*	Yes/No
. ▸ *Append Var to DBX*	Yes/No

Chapter 7: BIOS Updating Procedure

Introduction

The BIOS is located in the Serial Peripheral Interface (SPI) chip on the processor board. This chapter discusses procedures on how to update the terminal SPI and/or BIOS. The update software is distributed via the NCR Website.

The BIOS update can be performed using the following methods:

- Bootable USB Memory Device
- Network - Refer to the *NCR Retail Systems Manager (RSM) Software User's Guide*, (B005-0000-1518) for information about this procedure.

Prerequisites

The following are required to perform a SPI/BIOS update.

- USB Keyboard
- BIOS Software. Download from the NCR website:

  http://www.ncr.com

  1. At this site, select the Support tab.
  2. Select **Drivers and Patches** >> **Retail Support Files** >> **NCR RealPOS and SelfServ Terminal and Operating Systems** >> **NCR RealPOS XR5 Rel. 1.0 (7701-1xxx)** >> **BIOS**.
  3. Select the desired BIOS File.
     - Network Image - Used with Network boot
     - USB Memory Key Image - Used with USB boot device
  4. Save the software to your local hard drive.

Creating a Bootable USB Memory Drive

The downloaded file contains the files necessary to create a bootable USB Memory Drive.

1. Insert a USB drive that is formatted as FAT (or FAT32).
2. Unzip the downloaded files.
3. Copy the files to the root directory of the USB drive.
4. Open a DOS command window.
5. Change directory to the USB Memory Drive.
6. Execute the following command:

   ```
   Syslinux -fma <USB drive letter>
   ```

   Example: `Syslinux -fma f:`

   This command erases any bootable methods that may be present on the USB drive and replaces it with the SPI/BIOS update process.

   If the resulting USB memory drive is not bootable, try the following command. This runs slower but is more effective.

   ```
   Syslinux -sfma <USB drive letter>
   ```

   Important: Do not run syslinux by double-clicking on it because it may affect the boot drive of the terminal being used to create the drive.

   Windows 7 Note: The above commands must be executed as administrator. Failure to run as administrator results in an MSR write failure. To open a command shell with administrator privileges perform the following:

   Start → **All Programs** → **Accessories** → **Command Prompt** → [right-click] **"Run as"** → **Administrator**

SPI/BIOS Updating Procedures

1. Insert the USB device containing the SPI/BIOS update software into the terminal.
2. Connect a USB keyboard.
3. Apply power. Validate that the SPI/BIOS configuration setup has the device containing the BIOS media as the first boot device in the Boot Menu or plan on using the **[F8]** override to force the correct boot device. Select the USB device from the list of boot devices.
4. The terminal boots and displays the SPI/BIOS Update main menu.

   There are six options from the main menu to run the update program. Three run automatically and two are interactive. *Option 1, the Automatic SPI and BIOS Update* executes automatically in 10 seconds unless the up/down arrow is pressed.

Automatic Method

With the Automatic Method you may see a prompt to enter the DMI (Desktop Management Interface), which is the terminal Class/Model/Serial information. This happens if the program detects invalid DMI information in the current BIOS, or if you are replacing the processor board, which has no Class/Model/Serial information in the BIOS. DMI information is mandatory.

Interactive Method

This method permits you to input/replace the Class/Model/Serial information.

Note: DMI information that is currently stored in the BIOS is displayed during power up. Press **[Tab]** at the NCR Logo to remove the logo. Press **[Pause]** to freeze the screen. Press **[Esc]** to continue.

5. Make a menu selection and follow the screen prompts (Option 1 is recommended).

```
1 Update SPI and BIOS - No prompt for Serial/Model/Class unless invalid
                        (Resets ME/AMT configuration/provisioning data)
2 Update BIOS only - No prompt for Serial/Model/Class unless invalid
                      (Keeps ME/AMT configuration/provisioning data)

***** Forced Update of Serial/Model/Class Information *****

3 Update DMI only - Serial/Model/Class update ONLY (no BIOS/SPI Update)
                    (Only one boot - no need for AC Power removal)

4 Update of SPI and BIOS - Always prompts for Serial/Model/Class
                    (Resets ME/AMT configuration/provisioning data)

5 Update of BIOS only - Always prompts for Serial/Model/Class
                    (Keeps ME/AMT configuration/provisioning data)

***** For Service Personnel Only *****

6 Update SPI and BIOS - Default Serial/Model/Class. Reset ME/AMT data
```

Option 1 - Update SPI and BIOS - No prompt for Serial/Model/Class unless invalid

1. Highlight Option 1 and press **[ENTER]**. (Executes automatically in 10 seconds unless the up/down arrow is pressed.)
2. The Flash Program updates the SPI/BIOS.
3. The Manageability Engine (ME) is programmed and a message is displayed indicating power must be removed before continuing. Press **[3]** to perform a 20 second AC power removal (automatically executes in 10 seconds if no keys are pressed).
4. Remove the USB device before the system boots.
5. System is ready for operation.

Option 2 - Update BIOS only - No prompt for Serial/Model/Class unless invalid

This option automatically updates the BIOS only.

1. Highlight Option 2 and press [ENTER].
2. The Flash Program updates the BIOS and automatically reboots the terminal.

Option 3 - Update DMI only - Serial/Model/Class update ONLY (no BIOS or SPI Update)

This option lets you enter the DMI information only. The SPI and BIOS are not updated.

1. Highlight Option 3 and press **[ENTER]**.
2. At the prompt press **[ENTER]** to enter the Class/Model/Serial Number information (DMI). Follow the onscreen format instructions.

   Example: `7701-5000-8801`**[ENTER]**
   `54-19378230`**[ENTER]**
3. Press **[1]** to confirm the data and to continue.
4. Remove the USB device before the system boots.
5. System is ready for operation.

Option 4 - Update of SPI and BIOS - Always prompts for Serial/Model/Class

This option is similar to Option 1 above except you are prompted for Class/Model/Serial information at the beginning of the program. You also have to select which type of update to run, BIOS or SPI.

1. Highlight Option 4 and press **[ENTER]**.
2. At the prompt press **[ENTER]** to enter the Class/Model/Serial Number information (DMI). Follow the on-screen format instructions.

   Example: `7701-5000-8801`**[ENTER]**
   `54-19378230`**[ENTER]**
3. Press 1 to confirm the data and to continue.
4. The Flash Program updates the SPI/BIOS and the Manageability Engine (ME) is programmed.
5. A message is displayed indicating power must be removed before continuing. Press **[3]** to perform a 20 second AC power removal (automatically executes in 2 minutes if no keys are pressed).
6. Remove the USB device before the system boots.

Option 5 - Update of BIOS only - Always prompts for Serial/Model/Class

This option prompts for Class/Model/Serial information at the beginning of the program and then updates the BIOS only.

1. Highlight Option 5 and press **[ENTER]**.
2. At the prompt press **[ENTER]** to enter the Class/Model/Serial Number information (DMI). Follow the onscreen format instructions.

   Example: `7701-5000-8801`**[ENTER]**
   `54-19378230`**[ENTER]**
3. Press **[1]** to confirm the data and to continue.
4. The Flash Program updates the SPI/BIOS and automatically reboots the terminal.

Option 6 - Update SPI and BIOS - Default Serial/Model/Class information

This option is for Service Personnel only. It updates the SPI and BIOS but leaves the Class/Model/Serial fields empty (erased). The DMI information is then entered when the board is installed in a terminal.

1. Highlight Option 6 and press **[ENTER]**.
2. The SPI and BIOS are updated and the system reboots (2 times).
3. Remove the USB device before the system boots.
4. System is ready for operation.

Chapter 8: Initial Terminal Imaging

Introduction

Factory default HDD/SSD images for the RealPOS *XR5* POS are distributed on bootable auto-imaging USB Flash Drive media. The following procedures describe how to apply/restore an image on the terminal.

Warning: Using this procedure will replace any previously stored OS images created using the *Disk Image Backup and Recovery Tool*.

Note: A USB Keyboard is required to perform this operation.

Imaging Procedure

1. Connect the USB flash drive to the target terminal that you wish to image.
2. Connect a USB keyboard to the terminal.

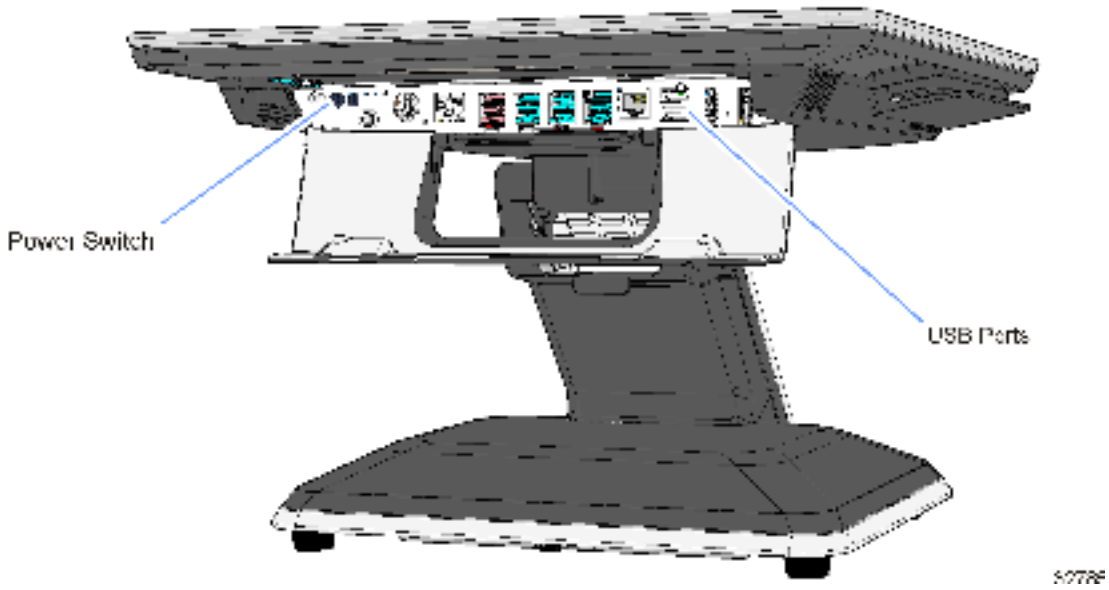

3. Power on the terminal and boot from the USB Flash Drive. This can be done by pressing **F8** during the boot and choosing the USB option (**NCR**), or by entering *BIOS Setup* and changing the boot order.
4. The system boots in the Windows PE OS environment. Press **Y** on the keyboard at the confirmation prompt to re-image the terminal.

5. When the imaging process is complete, enter **Exit** on the keyboard to reboot the system.
6. After the reboot, remove the USB Flash Drive and disconnect the keyboard.

Chapter 9: 2x20 Customer Display Interface

Host/Retail Display Command Interface

The Retail Display accepts two types of data: display data and command data. If a byte received from the host is any character except the ESC (0x1B) character, it is processed as a character and displayed on the Retail Display. If an ESC character (0x1B) is received, the subsequent byte(s) is processed as a command. If the subsequent byte is an invalid command it is ignored. If an ESC is received, but no command byte is received immediately, the firmware waits forever if need be and uses the next received byte(s) to complete the command.

Note: **Note:** Each command consists of at least two bytes. The first byte (0x1B) is a command identifier indicating the next byte(s) is a command byte. The command byte may be followed by parameter or data bytes depending on the command. Also note that the ESC character can be displayed by using the Display ESC Character command.

Character Scrolling Rate

The recommended scrolling rate is at minimum of approximately 350 ms (milliseconds) interval for this LCD display. Residual images may appear if scrolled at a faster interval (lesser than 350 ms).

Set Screen Save Blank

Format	1B 09

Description

This command is intended to preserve the life of the display hardware unit. The firmware maintains a five-minute timer that triggers this feature. The Screen Save feature can be disabled through a command from the host software. When the feature is not disabled, two specific options exist. The Set Screen Save Blank operation causes the display to go blank when the timer expires. When the firmware receives the command code, the Screen Save mode is canceled, and the five-minute timer is established. Screen Save Blank removes power from the Retail Display, and refreshes the display in the same manner as the Set Low Power On command. At power up, the timer is established at five minutes, and Screen Save Blank is established as a default. The five minute timer is not reset by any invalid or incorrect command.

Set Screen Save Walk

Format	1B 0A

Description

This command causes the visible display to walk right to left when the Screen Save timer expires (five minutes). The characters on the display appear to walk across the corresponding display row from right to left. The two lines in the 2x20 Display walk in parallel completely off the left side of the display, and then the two lines appear to come back from the right. If the display is space filled, then no effect is perceived even though the walking is taking place. The Screen Save Blank mode is the default mode after power up.

Turn On Screen Save

Format	1B 0B

Description

This command causes one of the screen save functions (Set Screen Save Blank or Set Screen Save Walk) to activate immediately rather than waiting for the screen save timer to expire. If the Disable Screen Save command is in effect when this command is issued, it is canceled, and the screen saver is enabled and activated immediately.

Disable Screen Save Option

Format	1B 0C

Description

The firmware ceases to keep time for the screen save activity from the host software, and the display neither goes blank nor begins to walk due to inactivity from the host. This command can be canceled by the Turn On Screen Save, Set Screen Save Blank, and Set Screen Save Walk commands.

Enable Character Blink

Format	1B 0D

Description

The blink attribute is the only modifier which is supported for the display character positions. Each time a new character is received, the current setting of the character blink operator is adopted as the working attribute for the new character. If a new character is received while character blink is enabled, the new character blinks. This makes it possible to have a display with both blinking and non-blinking characters. For the VFD, the blink period is 1 second on and 1 second off. For the LCD, the blink period is .5 second on and .5 second off. All characters that are blink enabled blink at the same time. The only way to cause an existing character to start or stop blinking is to set up the character blink operator, move the cursor to the correct character, and resend the individual character code.

Disable Character Blink

Format	1B 0E

Description

This command counteracts the Enable Character Blink. The firmware implements all new character codes with an on and holding character presentation. On power up, the character blink modifier is defaulted to disabled.

Move Cursor Left

Format	1B 0F

Description

Moves the cursor one position to the left. When the cursor is at the left end of the upper line, it moves to the right end of the lower line. When the cursor is at the left end of the lower line, it moves to the right end of the upper line. The cursor location always indicates the position of the next character to be displayed, whether the cursor is enabled and blinking or not. After each character is displayed, the firmware performs a logical Move Cursor Right command.

Move Cursor Right

Format	1B 10

Description

Moves the cursor one position to the right. When the cursor is at the right end of the upper line, it moves to the left end of the lower line. When the cursor is at the right end of the lower line, it moves to the left end of the upper line. The cursor location always indicates the position of the next character to be displayed, whether the cursor is enabled and blinking or not. After each character is displayed, the firmware performs a logical Move Cursor Right command. When the cursor is at the right end of the lower line, it moves to the left end of the upper line and operates in an Overwrite Mode. The next character sent to the display overwrites the character in the left end of the upper line.

Move Cursor Up

Format	1B 11

Description

Moves the cursor up one line. When the cursor is on the upper line, the cursor is moved to the same column on the lower line. The cursor location always indicates the position of the next character to be displayed, whether the cursor is enabled and blinking or not. After each character is displayed, the firmware performs a logical Move Cursor Right command.

Move Cursor Down

Format	1B 12

Description

Moves the cursor down one line. When the cursor is on the lower line, the cursor is moved to the same column on the upper line. The cursor location always indicates the position of the next character to be displayed, whether the cursor is enabled and blinking or not. After each character is displayed, the firmware performs a logical Move Cursor Right command.

Retail Display Commands

The following table describes the Retail Display commands supported:

Command	Function
1B 01	Reset Display
1B 02	Erase Display
1B 04	Set Diagnostic State On
1B 05	Set Display State On
1B 06	Set Low Power State On (Default)
1B 07	Enable Cursor
1B 08	Disable Cursor (Default)
1B 09	Set Screen Save Blank
1B 0A	Set Screen Save Walk (Default)
1B 0B	Turn On Screen Save
1B 0C	Disable Screen Save Feature
1B 0D	Enable Character Blink
1B 0E	Disable Character Blink (Default)
1B 0F	Move Cursor Left
1B 10	Move Cursor Right
1B 11	Move Cursor Up
1B 12	Move Cursor Down
1B 13	Set Cursor Position
1B 17	Brightness Adjustment (Default - 5)
1B 18	Read Display ID
1B 19	Read Display Part Number
1B 1B	Display ESC Character
1B 20	Select Character Set 1 (Default)[1]
1B 21	Select Character Set 2[1]

Command	Function
1B 22	Select Character Set 3[1]
1B 23	Select Character Set 4 (External ROM required)[1]
1B 24	Select Character Set 5 (External ROM required)[1]
1B 25	Select Character Set 6 (External ROM required)[1]
1B 26	Select Character Set 7 (External ROM required)[1]
1B 27	Select Character Set 8 (External ROM required)[1]
1B 28	Select Character Set 9 (External ROM required)[1]
1B 29	Select Character Set 10 (External ROM required)[1]
1B 2A	Select Character Set 11 (External ROM required)[1]
1B 2B	Select Character Set 12 (External ROM required)[1]
1B 2C	Select Character Set 13 (External ROM required)[1]
1B 2D	Select Character Set 14 (External ROM required)[1]
1B 2E	Select Character Set 15 (External ROM required)[1]
1B 2F	Select Character Set 16 (External ROM required)[1]
1B 30	Select Character Set 17 (External ROM required)[1]
1B 31	Select Character Set 18 (External ROM required)[1]
1B 32	Select Character Set 19 (External ROM required)[1]

This command is not supported by the LCD. The only action taken is to take the display out of Screen Save.

Move Cursor To Specified Position

Format	1B 13
Range	00 ≤ nn ≤ 27 (hex)

Description

Moves the cursor to the specified position. Position 0 is the upper leftmost position, and position 27 is the lower rightmost position. Any value outside this range is discarded, the command is ignored, and the cursor is moved. The cursor location always indicates the position of the next character to be displayed, whether the cursor is enabled and blinking or not. After each character is displayed, the firmware performs a logical Move Cursor Right command. The character positions are shown in the following:

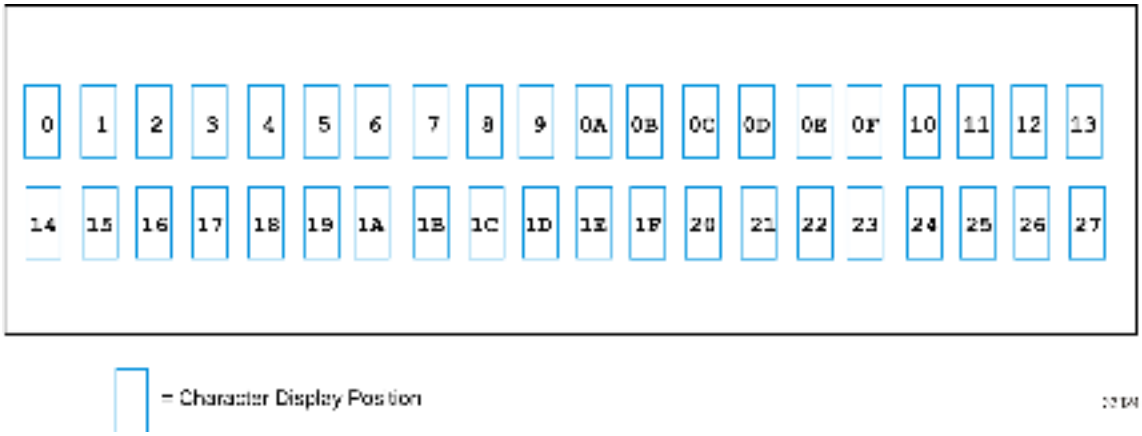

Character Display Positions

Brightness Adjustment

Format	1B 17
Range	01 ≤ nn ≤ 05

Description

Adjusts the brightness of the entire display. Individual characters or display positions are not adjusted. On power up, the default brightness setting is 5 (100%).

Nn	Brightness
01	20%
02	40%
03	60%
04	80%
05	100%

Note: This command is not supported by the LCD. The only action taken is to take the display out of Screen Save.

Read Display ID Byte

Format	1B 18
Returns	0x8A

Description

This command is a request for the Retail Display to return an identifier. The Retail Display returns one byte (0x8A) that identifies the Retail Display as a 2x20 with 7x9 dot matrix.

Read Display ID String

Format	1B 19
Returns	0x1A, "NCR 7701, xxx-xxxxxxx"

Description

where 0x1A is a 1 byte string length indicator which indicates the length of the string that follows the string length indicator. For example, 1AH characters are sent after the string length indicator. Note: indicates a space character (20H). The quotation marks “” are not part of the string and are not returned. XXX-XXXXXXX represents the current firmware part number.

Description:This command is a request for the Retail Display to return an ASCII string with detailed product information.

Display ESC Character

Format	1B 12

Description

This command is a request for the ESC character to be displayed at the current cursor position.

Select Character Set *n*

Format	1B20 - 1B32

Description

VFD only. This set of commands chooses one of the three supported internal character sets or, if an external ROM is present, one of up to 16 additional character sets. Character set 1 is defined as PC Code Page 858 (International), character set 2 is defined as Katakana (Japanese), and character set 3 is defined as Code Page 866 (Cyrillic Eastern European). Character sets 4 through 19 are only valid if an external ROM containing extra character sets is present. Character set selection is dynamic. Host software can switch between character sets at any time. Switching between sets does not erase or change the display. This means characters from multiple character sets may be on a display. The default character set is number 1, PC Code Page 858 (International).

Character Sets

There are three character sets pre-installed.

- Code 858 (International) (VFD and LCD)
- Katakana
- Code 866 (Cyrillic)

The VFD supports 16 additional character sets of 256 characters each. These additional character sets are inside a PROM that plugs into a socket on the PCB. All of the characters sets are stored in non-volatile memory.

Code Page 858 (International)

```
000     001     002     003     004     005     006
.....................................●●●..●...●...
.......●●●●●●.●●●●●●..............●●●●●●●●●●●●●●●
.......●.....●●●●●●●.●●.●●.●●●●●●●●●●●●●●●●●●●●●
.......●.●.●.●●.●.●●●●●●●●●●●●●●●●●●●●●●●●●●●●●●
.......●.....●●●●●●●●●●●●●●●●●●●●●●●●●●●●●●●●●●●
.......●.●●●.●●●...●●.●●●●●●●●●●●●●●●●●●●●●●●●●●
.......●..●..●●●.●●●..●●●●●●●●●●●●●●●●●●●●●●●●●●
.......●●●●●●.●●●●●●...●●●●●●●●●●●●●●●●●●●●●●●●●
.......●●●●●●.......●●●●●●●●●●●●●●●●●●●●●●●●●●●●
```

```
007     008     009     010     011     012     013
.......●●●●●●●.......●●●●●●●.......●●●●●●●.......
.......●●●●●●●.......●●●●●●●..●●●..●●●●●●●...●●..
.......●●●●●●●..●●●..●●...●●...●.●.●.....●...●●●.
...●...●●●.●●●.●...●.●.●●●.●.●.....●.....●...●..●
.●●●●●.●.....●.●...●.●.●●●.●.●●●●..●●●●●●●...●...
...●...●●●.●●●.●...●.●●●●●●●●....●●●●●●●...●...●
.......●●●●●●●..●●●..●●...●●●●....●●●●●●●●●●●●...
.......●●●●●●●.......●●●●●●●.●●●●..●●●●●●●●●●●...
.......●●●●●●●.......●●●●●●●.......●●●●●●●.......
```

```
014     015     016     017     018     019     020
.......●●●●●●●●●●●●●●●●●●●●●●●●●●●●●●●●●●●●●●●●●
..●●●●●●●.●..●..●●●●●●●●●●●●●●●●●●●●●●●●●●●●●●●
..●...●●●.●.●.●●●●●●●●●●●●●●●●●●●●●●●●●●●●●●●●●
..●●●●●●..●.●..●●●●●●●●●●●●●●●●●●●●●●●●●●●●●●●●
..●...●●●●...●●●●●●●●●●●●●●●●●●●●●●●●●●●●●●●●●
..●...●●..●.●..●●●●●●●●●●●●●●●●●●●●●●●●●●●●●●●●
●●●.●●●.●.●.●.●●●●●●●●●●●●●●●●●●●●●●●●●●●●●●●●
●●●.●●●.●..●..●●●●●●●●●●●●●●●●●●●●●●●●●●●●●●●●
```

```
021     022     023     024     025     026     027
.......●●●●●●●●●●●●●●●●●●●●●●●●●●●●●●●●●●●●●●●●●
.●●●●●●●●●●●●●●●●●●●●●●●●●●●●●●●●●●●●●●●●●●●●●●
●.......●●●●●●●●●●●●●●●●●●●●●●●●●●●●●●●●●●●●●●●
.●●●●●●●●●●●●●●●●●●●●●●●●●●●●●●●●●●●●●●●●●●●●●●
●.....●●●●●●●●●●●●●●●●●●●●●●●●●●●●●●●●●●●●●●●●
.●●●●●●●●●●●●●●●●●●●●●●●●●●●●●●●●●●●●●●●●●●●●●
.....●●●●●●●●●●●●●●●●●●●●●●●●●●●●●●●●●●●●●●●●
●●●●●●●●●●●●●●●●●●●●●●●●●●●●●●●●●●●●●●●●●●●●●
```

```
028     029     030     031     032     033     034
.......●●●●●●●●●●●●●●●●●●●●●●●●●●●●●●●●●●●●●●●●●
.......●●●●●●●●●●●●●●●●●●●●●●●●●●●●●●●●●●●●●●●●●
●.....●●●●●●●●●●●●●●●●●●●●●●●●●●●●●●●●●●●●●●●●●
●.....●●●●●●●●●●●●●●●●●●●●●●●●●●●●●●●●●●●●●●●●●
●.....●●●●●●●●●●●●●●●●●●●●●●●●●●●●●●●●●●●●●●●●●
●.....●●●●●●●●●●●●●●●●●●●●●●●●●●●●●●●●●●●●●●●●●
●●●●●●●●●●●●●●●●●●●●●●●●●●●●●●●●●●●●●●●●●●●●●●
.....●●●●●●●●●●●●●●●●●●●●●●●●●●●●●●●●●●●●●●●●●
.....●●●●●●●●●●●●●●●●●●●●●●●●●●●●●●●●●●●●●●●●●
```

```
035     036     037     038     039     040     041
.......
..●.●..
..●.●..
●●●●●●●
..●.●..
●●●●●●●
..●.●..
..●.●..
.......

042     043     044     045     046     047     048
.......
.......
.●...●.
..●.●..
●●●●●●●
..●.●..
.●...●.
.......
.......

049     050     051     052     053     054     055
.......
...●...
..●●...
...●...
...●...
...●...
..●●●..
.......

056     057     058     059     060     061     062
.......
.●●●●●.
●.....●
●.....●
.●●●●●.
●.....●
●.....●
.●●●●●.
.......

063     064     065     066     067     068     069
.......
..●●●..
.●...●.
....●..
...●...
...●...
.......
...●...
.......
```

```
070      071      072      073      074      075      076
.......  .......  .......  .......  .......  .......  .......
●●●●●●●  .●●●●●.  ●.....●  .●●●●●.  ....●●●  ●.....●  ●......
●......  ●.....●  ●.....●  ...●...  .....●.  ●....●.  ●......
●......  ●......  ●.....●  ...●...  .....●.  ●...●..  ●......
●●●●●..  ●...●●●  ●●●●●●●  ...●...  .....●.  ●●●....  ●......
●......  ●.....●  ●.....●  ...●...  .....●.  ●...●..  ●......
●......  ●.....●  ●.....●  ...●...  ●....●.  ●....●.  ●......
●......  .●●●●●.  ●.....●  .●●●●●.  .●●●●..  ●.....●  ●●●●●●●
.......  .......  .......  .......  .......  .......  .......

077      078      079      080      081      082      083
.......  .......  .......  .......  .......  .......  .......
●.....●  ●.....●  .●●●●●.  ●●●●●●.  .●●●●●.  ●●●●●●.  .●●●●●.
●.●.●.●  ●●....●  ●.....●  ●.....●  ●.....●  ●.....●  ●.....●
●..●..●  ●.●...●  ●.....●  ●.....●  ●.....●  ●.....●  ●......
●..●..●  ●..●..●  ●.....●  ●●●●●●.  ●.....●  ●●●●●●.  .●●●●●.
●.....●  ●...●.●  ●.....●  ●......  ●.....●  ●...●..  ......●
●.....●  ●....●●  ●.....●  ●......  ●.●...●  ●....●.  ●.....●
●.....●  ●.....●  .●●●●●.  ●......  .●●●●●.  ●.....●  .●●●●●.
.......  .......  .......  .......  ....●●●  .......  .......

084      085      086      087      088      089      090
.......  .......  .......  .......  .......  .......  .......
●●●●●●●  ●.....●  ●.....●  ●.....●  ●.....●  ●.....●  ●●●●●●●
...●...  ●.....●  ●.....●  ●.....●  .●...●.  ●.....●  .....●.
...●...  ●.....●  ●.....●  ●.....●  ..●.●..  .●...●.  ....●..
...●...  ●.....●  ●.....●  ●..●..●  ...●...  ..●.●..  ...●...
...●...  ●.....●  .●...●.  ●..●..●  ..●.●..  ...●...  ..●....
...●...  ●.....●  ..●.●..  ●.●.●.●  .●...●.  ...●...  .●.....
...●...  .●●●●●.  ...●...  .●...●.  ●.....●  ...●...  ●●●●●●●
.......  .......  .......  .......  .......  .......  .......

091      092      093      094      095      096      097
.......  .......  .......  ...●...  .......  ..●●...  .......
..●●●..  .......  ..●●●..  ..●.●..  .......  ..●....  .......
..●....  .●.....  ....●..  .●...●.  .......  ...●...  .......
..●....  ..●....  ....●..  .......  .......  .......  .●●●●..
..●....  ...●...  ....●..  .......  .......  .......  .....●.
..●....  ....●..  ....●..  .......  .......  .......  .●●●●●.
..●....  .....●.  ....●..  .......  .......  .......  ●....●.
..●●●..  ......●  ..●●●..  .......  .......  .......  .●●●●.●
.......  .......  .......  .......  ●●●●●●●  .......  .......

098      099      100      101      102      103      104
.......  .......  .......  .......  .......  .......  .......
●......  .......  ......●  .......  ...●●●.  .......  ●......
●......  .......  ......●  .......  ..●...●  .......  ●......
●●●●●●.  .●●●●●●  .●●●●●●  .●●●●●.  ..●....  .●●●●●●  ●●●●●●.
●.....●  ●......  ●.....●  ●.....●  .●●●●..  ●.....●  ●.....●
●.....●  ●......  ●.....●  ●●●●●●●  ..●....  ●.....●  ●.....●
●.....●  ●......  ●.....●  ●......  ..●....  .●●●●●●  ●.....●
●●●●●●.  .●●●●●●  .●●●●●●  .●●●●●●  ..●....  ......●  ●.....●
.......  .......  .......  .......  .......  .●●●●●.  .......
```

```
105     106     107     108     109     110     111
............●.  .●.....  ...●...  .......  .......  .......
.......  .●.....  .●.....  .......  .●●●●●.  .●●●●●.
...●...  .●...●.  ...●...  ●●●.●●.  ●.●●●●.  ●.....●
...●...  .●..●..  ...●...  ●..●..●  .●....●  ●.....●
...●...  .●●●...  ...●...  ●..●..●  .●....●  ●.....●
...●...  .●..●..  ...●...  ●.....●  .●....●  ●.....●
...●...  .●...●.  ...●...  ●.....●  .●....●  .●●●●●.
.......  ..●●●..  .......  .......  .......  .......  .......

112     113     114     115     116     117     118
.●●●●●.  .●●●●●.  ●.●●●●.  .●●●●●.  .●●●●..  ●....●.  .●...●.
.●....●  ●....●.  ●●....●  ●.....  ..●....  ●....●.  .●...●.
.●....●  ●....●.  ●.....●  .●●●●●.  ..●....  ●....●.  .●...●.
.●●●●●.  .●●●●●.  ●.....  .....●  ..●..●.  ●....●.  ..●.●..
.●.....  .....●.  ●.....  .●●●●●.  ...●●..  .●●●●.●  ...●...
.●.....  .....●●  .......  .......  .......  .......  .......

119     120     121     122     123     124     125
.....●  ●.....●  ●.....●  ●●●●●●●  ...●...  ...●...  ...●...
●..●..●  .●...●.  ●.....●  .....●.  .●●....  .....●●.
●..●..●  ...●...  ●.....●  ...●...  ...●...  ...●...  ...●...
●.●.●.●  .●...●.  .●●●●●●  .●.....  ...●...  ...●...  ...●...
.●...●.  ●.....●  .....●.  ●●●●●●●  ....●..  ...●...  ..●....
.......  .......  .●●●●..  .......  .......  .......  .......

126     127     128     129     130     131     132
.●●●..●  .......  .......  .......  ....●..  ...●...  .......
●..●●●.  ...●...  .●●●●●.  .●...●.  ...●...  ..●.●..  .●...●.
.......  .●...●.  ●.....●  .....●.  .....●.  .....●.  .....●.
.....●.  ●.....●  ●.....●  ●....●.  .●●●●●.  .●●●●..  .●●●●..
.....●.  ●.....●  ●.....●  ●....●.  ●.....●  .....●.  .....●.
.....●.  ●●●●●●●  ●.....●  ●....●.  ●●●●●●●  .●●●●●.  .●●●●●.
.....●.  .....●.  ●.....●  ●....●.  ●.....●  ●....●.  ●....●.
.....●.  .....●.  .●●●●●.  .●●●●.●  .●●●●●●  .●●●●.●  .●●●●.●
.....●.  .....●.  ●●●●...  .....●.  .....●.  .....●.  .....●.

133     134     135     136     137     138     139
..●....  ...●...  .....●.  ...●...  .....●.  ..●....  .....●.
...●...  ...●...  .....●.  ..●.●..  .●...●.  ...●...  .●...●.
.....●.  .....●.  .....●.  .....●.  .....●.  .....●.  .....●.
.●●●●..  .●●●●..  .●●●●●.  .●●●●●.  .●●●●●.  .●●●●●.  ...●...
.....●.  .....●.  ●.....●  ●.....●  ●.....●  ●.....●  ...●...
.●●●●●.  .●●●●●.  ●.....●  ●●●●●●●  ●●●●●●●  ●●●●●●●  ...●...
●....●.  ●....●.  ●.....●  ●.....●  ●.....●  ●.....●  ...●...
.●●●●.●  .●●●●.●  .●●●●●.  .●●●●●●  .●●●●●●  .●●●●●●  ...●...
.....●.  .....●.  ●●●●...  .....●.  .....●.  .....●.  .....●.
```

```
140     141     142     143     144     145     146
...●...  ..●....  .●...●.  ...●...  ....●..  .......  .......
..●.●..  ...●...  .......  .......  ...●...  .......  .●●●●●●
.......  .......  .●●●●●.  .●●●●●.  ●●●●●●●  .......  ●..●...
...●...  ...●...  ●.....●  ●.....●  ●......  .●●●●●.  ●..●...
...●...  ...●...  ●.....●  ●.....●  ●●●●●..  ...●..●  ●●●●●●.
...●...  ...●...  ●●●●●●●  ●●●●●●●  ●......  .●●●●●●  ●..●...
...●...  ...●...  ●.....●  ●.....●  ●......  ●..●...  ●..●...
...●...  ...●...  ●.....●  ●.....●  ●●●●●●●  .●●●●●●  ●..●●●●
.......  .......  .......  .......  .......  .......  .......

147     148     149     150     151     152     153
...●...  .......  ..●....  ...●...  ..●....  .......  .●...●.
..●.●..  .●...●.  ...●...  ..●.●..  ...●...  .●...●.  .......
.......  .......  .......  .......  .......  .......  .●●●●●.
.●●●●●.  .●●●●●.  .●●●●●.  ●....●.  ●....●.  ●.....●  ●.....●
●.....●  ●.....●  ●.....●  ●....●.  ●....●.  ●.....●  ●.....●
●.....●  ●.....●  ●.....●  ●....●.  ●....●.  ●.....●  ●.....●
●.....●  ●.....●  ●.....●  ●....●.  ●....●.  .●●●●●●  ●.....●
.●●●●●.  .●●●●●.  .●●●●●.  .●●●●.●  .●●●●.●  .....●.  .●●●●●.
.......  .......  .......  .......  .......  .●●●●..  .......

154     155     156     157     158     159     160
.●...●.  .......  .......  .......  .......  .......  ....●..
.......  .......  ..●●●..  ..●●●.●  .......  ....●●.  ...●...
●.....●  ......●  .●...●.  .●...●.  .......  ...●..●  .......
●.....●  ..●●●..  .●.....  ●...●.●  .●...●.  ...●...  .●●●●..
●.....●  .●..●●.  ●●●●●..  ●..●..●  ..●.●..  .●●●●●.  .....●.
●.....●  .●.●.●.  .●.....  ●.●...●  ...●...  ...●...  .●●●●●.
●.....●  .●●..●.  .●....●  .●...●.  ..●.●..  ●..●...  ●....●.
.●●●●●.  ..●●●..  ●.●●●●.  ●.●●●..  .●...●.  .●●....  .●●●●.●
.......  ●......  .......  .......  .......  .......  .......

161     162     163     164     165     166     167
....●..  ....●..  ....●..  ..●●..●  ..●●..●  ..●●●..  ..●●●..
...●...  ...●...  ...●...  .●..●●.  .●..●●.  .●...●.  .●...●.
.......  .......  .......  .......  ●.....●  .●...●.  .●...●.
...●...  .●●●●●.  ●....●.  ●.●●●●.  ●●....●  ..●●●.●  ..●●●..
...●...  ●.....●  ●....●.  .●....●  ●.●...●  .......  .......
...●...  ●.....●  ●....●.  .●....●  ●..●..●  .●●●●●●  .●●●●●.
...●...  ●.....●  ●....●.  .●....●  ●...●.●  .......  .......
...●...  .●●●●●.  .●●●●.●  .●....●  ●....●●  .......  .......
.......  .......  .......  .......  .......  .......  .......

168     169     170     171     172     173     174
...●...  .●●●●●.  .......  ●......  ●......  .......  .......
.......  ●●...●●  .......  ●...●..  ●...●..  ...●...  ..●.●..
...●...  ●.●●..●  .......  ●..●...  ●..●...  .......  .●.●...
...●...  ●.●.●.●  ●●●●●●●  ●.●....  ●.●.●..  ...●...  ●.●....
..●....  ●.●●..●  ......●  .●.●●..  .●.●●..  ...●...  .●.●...
.●...●.  ●.●.●.●  ......●  ●.●..●.  ●.●.●..  ..●●●..  ..●.●..
..●●●..  ●●...●●  .......  ....●..  .●●●●●.  ..●●●..  .......
.......  .●●●●●.  .......  ...●...  ....●..  ...●...  .......
.......  .......  .......  ..●●●●.  ....●..  .......  .......
```

```
175     176     177     178     179     180     181
.......  ..●...●  ●..●..●  .●.●.●.  ...●...  ...●...  ....●..
..●.●..  ●...●..  .●...●.  ●.●.●..  ...●...  ...●...  ...●...
...●.●.  ..●...●  ●..●..●  .●.●.●.  ...●...  ...●...  .●●●●●.
....●.●  ●...●..  .●...●.  ●.●.●..  ...●...  ...●...  ●.....●
...●.●.  ..●...●  ●..●..●  .●.●.●.  ...●...  ●●●●...  ●.....●
..●.●..  ●...●..  .●...●.  ●.●.●..  ...●...  ...●...  ●●●●●●●
.......  ..●...●  ●..●..●  .●.●.●.  ...●...  ...●...  ●.....●
.......  ●...●..  .●...●.  ●.●.●..  ...●...  ...●...  ●.....●
.......  ..●...●  ●..●..●  .●.●.●.  ...●...  ...●...  .......

182     183     184     185     186     187     188
...●...  ..●....  .●●●●●.  ..●.●..  ..●.●..  .......  ..●.●..
..●.●..  ...●...  ●..●..●  ..●.●..  ..●.●..  .......  ..●.●..
.●●●●●.  .●●●●●.  ●.●.●.●  ..●.●..  ..●.●..  .......  ..●.●..
●.....●  ●.....●  ●.●...●  ●●●.●..  ..●.●..  ●●●●●..  ●●●.●..
●.....●  ●.....●  ●.●.●.●  ....●..  ..●.●..  ....●..  ....●..
●●●●●●●  ●●●●●●●  ●..●..●  ●●●.●..  ..●.●..  ●●●.●..  ●●●●●..
●.....●  ●.....●  .●●●●●.  ..●.●..  ..●.●..  ..●.●..  .......
●.....●  ●.....●  .......  ..●.●..  ..●.●..  ..●.●..  .......
.......  .......  .......  ..●.●..  ..●.●..  ..●.●..  .......

189     190     191     192     193     194     195
...●...  .......  .......  ...●...  ...●...  .......  ...●...
...●...  ●.....●  .......  ...●...  ...●...  .......  ...●...
.●●●●●.  .●...●.  .......  ...●...  ...●...  .......  ...●...
●......  ...●...  .......  ...●...  ...●...  .......  ...●...
●......  .●●●●●.  ●●●●...  ...●●●●  ●●●●●●●  ●●●●●●●  ...●●●●
.●●●●●.  ...●...  ...●...  .......  .......  ...●...  ...●...
...●...  .●●●●●.  ...●...  .......  .......  ...●...  ...●...
...●...  ...●...  ...●...  .......  .......  ...●...  ...●...
.......  .......  ...●...  .......  .......  ...●...  ...●...

196     197     198     199     200     201     202
.......  ...●...  .●●●..●  .●●●..●  .●.●...  .......  ..●.●..
.......  ...●...  ●..●●●.  ●..●●●.  .●.●...  .......  ..●.●..
.......  ...●...  .......  .......  .●.●●●●  .●●●●●●  ●●●.●●●
.......  ...●...  .●●●●..  .●●●●●.  .●.....  .●.....  .......
●●●●●●●  ●●●●●●●  .....●.  ●.....●  .●●●●●●  .●.●●●●  ●●●●●●●
.......  ...●...  .●●●●●.  ●●●●●●●  .......  .●.●...  .......
.......  ...●...  ●....●.  ●.....●  .......  .●.●...  .......
.......  ...●...  .●●●●.●  ●.....●  .......  .●.●...  .......
.......  ...●...  .......  .......  .......  .●.●...  .......

203     204     205     206     207     208     209
.......  ..●.●..  .......  ..●.●..  .......  ...●●●.  .......
.......  ..●.●..  .......  ..●.●..  ●.....●  ...●...  ●●●●●..
●●●●●●●  ..●.●●●  ●●●●●●●  ●●●.●●●  .●●●●●.  ....●..  .●...●.
.......  ..●....  .......  .......  .●...●.  .●●●●●.  .●....●
●●●.●●●  ..●.●●●  ●●●●●●●  ●●●.●●●  .●...●.  ●....●.  ●●●●..●
..●.●..  ..●.●..  .......  ..●.●..  .●●●●●.  ●....●.  .●....●
..●.●..  ..●.●..  .......  ..●.●..  ●.....●  .●●●●..  .●...●.
..●.●..  ..●.●..  .......  ..●.●..  .......  .......  ●●●●●..
..●.●..  ..●.●..  .......  ..●.●..  .......  .......  .......
```

```
210     211     212     213     214     215     216
...●...  .●...●.  ..●....  .....●●  ....●..  ...●...  .●...●.
..●.●..  .......  ...●...  ....●..  ...●...  ..●.●..  .......
●●●●●●●  ●●●●●●●  ●●●●●●●  ...●...  .●●●●●.  .●●●●●.  .●●●●●.
●......  ●......  ●......  ..●....  ...●...  ...●...  ...●...
●●●●●..  ●●●●●..  ●●●●●..  ●●●●●●●  ...●...  ...●...  ...●...
●......  ●......  ●......  ●●●●●●●  ...●...  ...●...  ...●...
●......  ●......  ●......  ...●...  ...●...  ...●...  ...●...
●●●●●●●  ●●●●●●●  ●●●●●●●  ....●..  .●●●●●.  .●●●●●.  .●●●●●.
.......  .......  .......  .....●●  .......  .......  .......

217     218     219     220     221     222     223
...●...  .......  ●●●●●●●  .......  .......  ..●....  ●●●●●●●
...●...  .......  ●●●●●●●  .......  ...●...  ...●...  ●●●●●●●
...●...  .......  ●●●●●●●  .......  ...●...  .●●●●●.  ●●●●●●●
...●...  .......  ●●●●●●●  .......  ...●...  ...●...  ●●●●●●●
●●●●...  ...●●●●  ●●●●●●●  .......  .......  ...●...  .......
.......  ...●...  ●●●●●●●  ●●●●●●●  ...●...  ...●...  .......
.......  ...●...  ●●●●●●●  ●●●●●●●  ...●...  ...●...  .......
.......  ...●...  ●●●●●●●  ●●●●●●●  ...●...  .●●●●●.  .......
.......  ...●...  ●●●●●●●  ●●●●●●●  .......  .......  .......

224     225     226     227     228     229     230
....●..  .......  ...●...  ..●....  ..●●..●  ..●●..●  .......
...●...  .●●●●..  ..●.●..  ...●...  .●..●●.  .●..●●.  .......
.●●●●●.  ●....●.  .●●●●●.  .●●●●●.  .......  .●●●●●.  .......
●.....●  ●....●.  ●.....●  ●.....●  .●●●●●.  ●.....●  .●....●
●.....●  ●●●●●●.  ●.....●  ●.....●  ●.....●  ●.....●  .●....●
●.....●  ●.....●  ●.....●  ●.....●  ●.....●  ●.....●  .●....●
●.....●  ●.....●  ●.....●  ●.....●  ●.....●  ●.....●  .●●●●●.
.●●●●●.  ●●●●●●.  .●●●●●.  .●●●●●.  .●●●●●.  .●●●●●.  .●.....
.......  ●......  .......  .......  .......  .......  ●......

231     232     233     234     235     236     237
.......  ●●●●●..  ....●..  ...●...  ..●....  ....●..  ....●..
●●●●●..  ..●....  ...●...  ..●.●..  ...●...  ...●...  ...●...
..●....  ..●●●●.  ●.....●  .......  ●.....●  .......  ●.....●
..●●●●.  ..●...●  ●.....●  ●.....●  ●.....●  ●.....●  .●...●.
..●...●  ..●...●  ●.....●  ●.....●  ●.....●  ●.....●  ...●...
..●●●●.  ..●●●●.  ●.....●  ●.....●  ●.....●  ●.....●  ...●...
..●....  ..●....  ●.....●  ●.....●  ●.....●  .●●●●●●  ...●...
●●●●●..  ●●●●●..  .●●●●●.  .●●●●●.  .●●●●●.  .....●.  ...●...
.......  .......  .......  .......  .......  .●●●●..  .......

238     239     240     241     242     243     244
●●●●●●●  ....●..  .......  ...●...  .......  ●●.....  .......
.......  ...●...  .......  ...●...  .......  ..●...●  .●●●●●●
.......  .......  .......  ●●●●●●●  .......  .●...●.  ●..●..●
.......  .......  ●●●●●●●  ...●...  .......  ..●.●..  ●..●..●
.......  .......  .......  ...●...  .......  ●●.●.●.  .●●●..●
.......  .......  .......  .......  .......  ..●.●●.  ...●..●
.......  .......  .......  ●●●●●●●  ●●●●●●●  .●.●.●.  ...●..●
.......  .......  .......  .......  .......  ●.●●●●●  ...●..●
.......  .......  .......  .......  ●●●●●●●  .....●.  .......
```

```
245      246      247      248      249      250      251
.......  .......  .......  .......  .●...●.  .......  .......
.●●●●●.  ...●...  .......  ..●●●..  .......  .......  ...●...
●......  .......  .......  .●...●.  .......  .......  ..●●...
.●●●●..  ●●●●●●●  .......  .●...●.  .......  ...●...  ...●...
●....●.  .......  .......  ..●●●..  .......  .......  ...●...
.●●●●..  ...●...  .......  .......  .......  .......  ..●●●..
.....●.  .......  .●.●●..  .......  .......  .......  .......
●●●●●..  .......  ..●●●..  .......  .......  .......  .......
.......  .......  .......  .......  .......  .......  .......

252      253      254      255
.......  .......  .......  .......
.●●●...  ..●●...  .●●●●●.  .......
....●..  .●..●..  .●●●●●.  .......
..●●...  ...●...  .●●●●●.  .......
....●..  ..●....  .●●●●●.  .......
.●●●...  .●●●●..  .●●●●●.  .......
.......  .......  .......  .......
.......  .......  .......  .......
.......  .......  .......  .......
```

Code Page Katakana

```
000     001     002     003     004     005     006
.......
.......
.......
.......
.......
.......
.......
.......
.......

007     008     009     010     011     012     013
.......
.......
.......
...●...
.●●●●●.
...●...
.......
.......
.......

014     015     016     017     018     019     020
.......
..●●●●●
..●...●
..●●●●●
..●...●
..●...●
●●●.●●●
●●●.●●●
.......

021     022     023     024     025     026     027
.......
.●●●●●.
●......
.●●●●..
●....●.
.●●●●..
.....●.
●●●●●..
.......

028     029     030     031     032     033     034
.......
.......
●......
●......
●......
●......
●●●●●●●
.......
.......
```

```
035     036     037     038     039     040     041
.......
..●.●..
..●.●..
●●●●●●●
..●.●..
●●●●●●●
..●.●..
..●.●..
.......

042     043     044     045     046     047     048
.......
.......
.●...●.
..●.●..
●●●●●●●
..●.●..
.●...●.
.......
.......

049     050     051     052     053     054     055
.......
...●...
..●●...
...●...
...●...
...●...
..●●●..
.......

056     057     058     059     060     061     062
.......
.●●●●●.
●.....●
●.....●
.●●●●●.
●.....●
●.....●
.●●●●●.
.......

063     064     065     066     067     068     069
.......
..●●●..
.●...●.
....●..
...●...
...●...
.......
...●...
.......
```

```
070     071     072     073     074     075     076
.................................................
●●●●●●●.●●●●●.●.....●.●●●●●....●●●●.....●●......
●.......●.....●●.....●...●...●.....●.●....●.●......
●.......●.......●.....●...●...●.....●.●...●..●......
●●●●●..●...●●●●●●●●...●...●.....●.●●●....●......
●.......●.....●●.....●...●...●.....●.●...●..●......
●.......●.....●●.....●...●...●....●.●....●.●......
●.......●●●●●.●.....●.●●●●●.●●●●..●.....●●●●●●●
.......................................
077     078     079     080     081     082     083
.................................................
●.....●●.....●.●●●●●.●●●●●●.●●●●●.●●●●●●.●●●●●.
●.●.●.●●●....●●.....●●.....●●.....●●.....●●.....●
●..●..●●.●...●●.....●●.....●●.....●●.....●●......
●..●..●●..●..●●.....●●●●●●.●.....●●●●●●.●●●●●.
●.....●●...●.●●.....●●......●.....●●...●..●......●
●.....●●....●●●.....●●......●.●...●●....●.●.....●
●.....●●.....●.●●●●●.●......●●●●●.●.....●.●●●●●.
.......................................
084     085     086     087     088     089     090
.................................................
●●●●●●●●.....●●.....●●.....●●.....●●.....●●●●●●●
...●...●.....●●.....●●.....●●...●.●.....●.....●.
...●...●.....●●.....●●.....●●..●.●..●...●....●..
...●...●.....●●.....●●..●..●●...●...●..●.●...●...
...●...●.....●.●...●.●..●..●●..●.●...●.●...●....
...●...●.....●..●.●..●.●.●.●●.●...●.●...●.....
...●...●●●●●.●...●...●...●.●●.....●...●...●●●●●●●
.......................................
091     092     093     094     095     096     097
........................●...●●●●●●●.●●●●●●●.●●●●●●●
..●●●..●●●●●●●..●●●..●●●●●●●●●●●●●●●●●●●●●●●●●●●
..●....●●●●●●●●●●●●●●●●●●●●●●●●●●●●●●●●●●●●●●●
..●....●●●●●●●●●●●●●●●●●●●●●●●●●●●●●●●●●●●●●●●
..●....●●●●●●●●●●●●●●●●●●●●●●●●●●●●●●●●●●●●●●●
..●....●●●●●●●●●●●●●●●●●●●●●●●●●●●●●●●●●●●●●●●
..●....●●●●●●●●●●●●●●●●●●●●●●●●●●●●●●●●●●●●●●●
..●●●..●●●●●●●●●●●●●●●●●●●●●●●●●●●●●●●●●●●●●●●
.......●●●●●●●●●●●●●●●●●●●●●●●●●●●●●●●●●●●●●●●
098     099     100     101     102     103     104
.................................................
●.....●●.....●●●●●●●●●●●●●●●●●●●●●●●●●●●●●●●●●●●
●.....●●.....●●●●●●●●●●●●●●●●●●●●●●●●●●●●●●●●●●●
●●●●●●.●●●●●●●●●●●●●●●●●●●●●●●●●●●●●●●●●●●●●●●●
●.....●●●●●●●●●●●●●●●●●●●●●●●●●●●●●●●●●●●●●●●●
●.....●●●●●●●●●●●●●●●●●●●●●●●●●●●●●●●●●●●●●●●●
●.....●●●●●●●●●●●●●●●●●●●●●●●●●●●●●●●●●●●●●●●●
●●●●●●.●●●●●●●●●●●●●●●●●●●●●●●●●●●●●●●●●●●●●●●●
.......●●●●●●●●●●●●●●●●●●●●●●●●●●●●●●●●●●●●●●●
```

```
105       106       107       108       109       110       111
.......   .......   .......   .......   .......   .......   .......
...●...   .....●.   .●.....   ...●...   .......   .......   .......
.......   .......   .●.....   ...●...   .......   .......   .......
...●...   .....●.   .●...●.   ...●...   ●●●.●●.   ●.●●●●.   .●●●●●.
...●...   .....●.   .●..●..   ...●...   ●..●..●   .●....●   ●.....●
...●...   .....●.   .●●●...   ...●...   ●..●..●   .●....●   ●.....●
...●...   .....●.   .●..●..   ...●...   ●.....●   .●....●   ●.....●
...●...   .●...●.   .●...●.   ...●...   ●.....●   .●....●   .●●●●●.
.......   ..●●●..   .......   .......   .......   .......   .......
```

```
112       113       114       115       116       117       118
.......   .......   .......   .......   .......   .......   .......
.......   .......   .......   .......   ..●....   .......   .......
.......   .......   .......   .......   ..●....   .......   .......
.●●●●●.   .●●●●●.   ●.●●●●.   .●●●●●.   .●●●●..   ●....●.   .●...●.
.●....●   ●....●.   ●●....●   ●......   ..●....   ●....●.   .●...●.
.●....●   ●....●.   ●.....●   .●●●●●.   ..●....   ●....●.   .●...●.
.●●●●●.   .●●●●●.   ●......   ......●   ..●..●.   ●....●.   ..●.●..
.●.....   .....●.   ●......   .●●●●●.   ...●●..   .●●●●.●   ...●...
.●.....   .....●●   .......   .......   .......   .......   .......
```

```
119       120       121       122       123       124       125
.......   .......   .......   .......   .......   .......   .......
.......   .......   .......   .......   ....●..   ...●...   ..●....
.......   .......   .......   .......   ...●...   ...●...   ...●...
●.....●   ●.....●   ●.....●   ●●●●●●●   ...●...   ...●...   ...●...
●..●..●   .●...●.   ●.....●   .....●.   .●●....   .......   ....●●.
●..●..●   ...●...   ●.....●   ...●...   ...●...   ...●...   ...●...
●.●.●.●   .●...●.   .●●●●●●   .●.....   ...●...   ...●...   ...●...
.●...●.   ●.....●   .....●.   ●●●●●●●   ....●..   ...●...   ..●....
.......   .......   .●●●●..   .......   .......   .......   .......
```

```
126       127       128       129       130       131       132
.●●●..●   .......   .......   .......   .......   .......   .......
●..●●●.   ...●...   .......   .......   .......   .......   .......
.......   .●...●.   .......   .......   .......   .......   .......
.......   ●.....●   ..●●●..   ...●...   ..●●●..   .●●●●●.   ....●..
.......   ●.....●   .●...●.   ..●●...   .●...●.   ....●..   ...●●..
.......   ●●●●●●●   .●...●.   ...●...   ...●●..   ...●●..   ..●.●..
.......   .......   .●...●.   ...●...   ..●....   .....●.   .●●●●●.
.......   .......   ..●●●..   ..●●●..   .●●●●●.   .●●●●..   ....●..
.......   .......   .......   .......   .......   .......   .......
```

```
133       134       135       136       137       138       139
.......   .......   .......   .......   .......   .......   .......
.......   .......   .......   .......   .......   .●●●●●.   .●...●.
.......   .......   .......   .......   .......   ●.....●   ..●.●..
.●●●●●.   ..●●●..   .●●●●●.   ..●●●..   ..●●●..   ......●   .●●●●●.
.●.....   .●.....   ....●..   .●...●.   .●...●.   .●●●..●   ...●...
.●●●●..   .●●●●..   ...●...   ..●●●..   ..●●●●.   ●...●.●   .●●●●●.
.....●.   .●...●.   ...●...   .●...●.   .....●.   ●...●.●   ...●...
.●●●●..   ..●●●..   ...●...   ..●●●..   ..●●●..   .●●●●●.   ...●...
.......   .......   .......   .......   .......   .......   .......
```

```
140      141      142      143      144      145      146
.......  .......  .......  .......  .......  .......  .......
...●...  ...●...  ..●....  ..●●●●●  .......  .......  .......
..●●●..  ...●...  ..●●●●●  ..●...●  .......  .......  .......
.●.●.●.  ...●...  .●...●.  ..●●●●●  .......  .......  .......
...●...  ...●...  ..●●●●●  ..●...●  .......  .......  .......
...●...  .●.●.●.  ..●..●.  ..●●●●●  .......  .......  .......
...●...  ..●●●..  .●●●●●●  .●....●  .......  .......  .......
...●...  ...●...  .....●.  ●.....●  .......  .......  .......
.......  .......  .......  .......  .......  .......  .......

147      148      149      150      151      152      153
.......  .......  .......  .......  .......  .......  .......
.......  .......  .......  .......  .......  .......  .......
.......  .......  .......  .......  .......  .......  .......
.......  .......  .......  .......  .......  .......  .......
.......  .......  .......  .......  .......  .......  .......
.......  .......  .......  .......  .......  .......  .......
.......  .......  .......  .......  .......  .......  .......
.......  .......  .......  .......  .......  .......  .......
.......  .......  .......  .......  .......  .......  .......

154      155      156      157      158      159      160
.......  .......  .......  .......  .......  .......  .......
.......  .......  .......  .......  .......  .......  .●●●●●●
.......  .......  .......  .......  .......  .......  .●....●
.......  .......  .......  .......  .......  .......  .●....●
.......  .......  .......  .......  .......  .......  .●●●●●●
.......  .......  .......  .......  .......  .......  .●....●
.......  .......  .......  .......  .......  .......  .●....●
.......  .......  .......  .......  .......  .......  .●●●●●●
.......  .......  .......  .......  .......  .......  .......

161      162      163      164      165      166      167
.......  ...●●●●  .......  .......  .......  .......  .......
.......  ...●...  .......  .......  .......  ●●●●●●●  .......
.......  ...●...  .......  .......  .......  .......●  .......
.......  ...●...  .......  .......  .......  ●●●●●●●  .●●●●●.
.......  ...●...  ...●...  .......  ..●●...  .......●  .....●.
.......  .......  ...●...  ●......  ..●●...  .....●.  ...●●..
●●●....  .......  ...●...  .●.....  .......  ....●..  ...●...
●.●....  .......  ...●...  ..●....  .......  ...●...  ...●...
●●●....  .......  ●●●●...  .......  .......  .......  ..●....

168      169      170      171      172      173      174
.......  .......  .......  .......  .......  .......  .......
.......  .......  .......  .......  .......  .......  .......
.......  .......  .......  .......  .......  .......  .......
....●..  ...●...  .......  ....●..  ...●...  .......  .......
...●...  .●●●●●.  .●●●●●.  .●●●●●.  .●●●●●●  ..●●●..  ..●●●●.
..●●...  .●...●.  ...●...  ...●●..  ...●..●  ....●..  .....●.
.●.●...  .....●.  ...●...  ..●.●..  ...●.●.  ....●..  ..●●●●.
...●...  ....●..  .●●●●●.  .●..●..  ...●...  .●●●●●.  .....●.
...●...  ...●...  .......  ...●●..  ...●...  .......  ..●●●●.
```

```
175     176     177     178     179     180     181
..............•••••••.....•.....•.....•.....•.....•..
.•.•.•.•••••••...••..•.•.•...•.•.•...•.•.•...•.•.•..
.•.•.•.•••••••...•...•..•...•.•.•...•.•.•...•.•.•..
.....•.•••••••...•...•...•...•.•.•...•.•.•...•..•..
....•..•••••••..•....•...•...•.....•.•.•...•.....•..
...•...•••••••.•.....•...•...•.....•.•.•...•.....•..
```

```
182     183     184     185     186     187     188
...•...•••••••...•...•..•.....•.•.•...•.•.•...•.•.•..
...•...•••••••...•...•..•••••.•.....•.•.•...•.•.•...
••••••••••••••.•••••.•.•...•.••••••••••••••••••••••.
...•..•...•...•...•...•....•.•...•.•.•...•.•.•...•..
...•..•...•...•...•...•....•.•...•.•.•...•.•.•...•..
...•..••••••••...•...•...•...•.•...•.•.•...•.•.•...•
...•..•...•...•...•...•...•.•...•.•.•...•.•.•...•..
..•...•...•...•...•...•...•.•...••••••••...•...•...
.•...•...•...•...•...•..••...•.•.•.....•...•...•...
```

```
189     190     191     192     193     194     195
.•••••••..•.....•.....•...•.....•.....•.....•.....•
•••••••...•.....•...••••.....•.•...•.•...•.•••••••.
.....•...•••••••.•.....•..•...•.••••...•.•...•.•...
....•...•...•...•.•....•.•.•..•...•...•.•...•.•••••••
...•....•..•...•......•....•.••••••••.....•....•...
..•.•...•.....•......•.....••...•.....•.....•....•..
.•...•...•.....•.....•.....•...•.....•.....•....•..
•.....•...•••••....•...•...•...•.....•...•...•.....
.•.....•.....••...•...•...•...•.....•...•...•.....
```

```
196     197     198     199     200     201     202
..•.....•...•.....•.....•...•.....•.....•.....•.....
..•.....•...•.....•••••••...•.....•.....•.....•...•..
..•.....•...•...•••••.•••••••.....•...•...•...•...•..
..••....•••••••.....•...•...•...•...•.....•...•...•..
..•.•...•...•.....•...•.•...•...•...•.....•...•...•..
..•...•...•...•.....•...•...•...•...•.....•...•...•..
..•.....•...•...•••••••...•.•...•.•.•.•...•...•...•.
..•.....•...•.....•...•...•...•...•...•...•.....•...
..•.....•...•.....•...•...•...•...•...•...•.....•...
```

```
203     204     205     206     207     208     209
.•.•.....•...•.....•...•.....•...•.....•...•.....•...
•.•.•...•...•.....•...•.....•...•.....•...•.....•...
•.•.•...•...•.....•...•.....•...•.....•...•.....•...
•.•.•...•...•.....•...•.....•...•.....•...•.....•...
•.•.•...•...•.....•...•.....•...•.....•...•.....•...
•.•.•...•...•.....•...•.....•...•.....•...•.....•...
•.•.•...•...•.....•...•.....•...•.....•...•.....•...
•.•.•...•...•.....•...•.....•...•.....•...•.....•...
•.•.•...•...•.....•...•.....•...•.....•...•.....•...
```

```
210     211     212     213     214     215     216
......● ....... ..●.... ....... ....... ....... .....●.
......● .●●●●●. ..●.... .●●●●.. .●●●●●● ..●●●.. .●...●.
..●..●. ..●.... ..●.... ....●.. .......● ....... .●...●.
...●.●. ●●●●●●● ●●●●●●● ....●.. .......● ●●●●●●● .●...●.
....●.. ..●.... ..●...● ....●.. .●●●●●● .......● .●...●.
...●.●. ..●.... ..●..●. ....●.. .......● .......● .....●.
..●...● ..●.... ..●.... ....●.. .......● .....●. .....●.
.●..... ..●●●●● ..●.... ●●●●●●● .●●●●●● ....●.. ....●..
....... ....... ..●.... ....... ....... ..●●... ...●...

217     218     219     220     221     222     223
....... ....... ....... ....... ....... ..●.... ●●●....
...●... .●..... ....... ●●●●●●● ●...... ●..●... ●.●....
.●.●... .●..... ●●●●●●● ●.....● .●..... .●..... ●●●....
.●.●... .●....● ●.....● ●.....● .......● ....... .......
.●.●... .●...●. ●.....● .......● .....●. ....... .......
.●.●..● .●..●.. ●.....● .....●. ....●.. ....... .......
.●.●.●. .●.●... ●.....● ....●.. ...●... ....... .......
.●.●●.. .●●.... ●●●●●●● ...●... ●●●.... ....... .......
●...... ....... ....... ....... ....... ....... .......

224     225     226     227     228     229     230
....... ....... ....... ....... ....... ....... .......
....... ....... ....... ....... ....... ....... .......
....... ....... ....... ....... ....... ....... .......
....... ....... ....... ....... ....... ....... .......
....... ....... ....... ....... ....... ....... .......
....... ....... ....... ....... ....... ....... .......
....... ....... ....... ....... ....... ....... .......
....... ....... ....... ....... ....... ....... .......
....... ....... ....... ....... ....... ....... .......

231     232     233     234     235     236     237
....... ....... ....... ....... ....... ....... .......
....... ....... ....... ....... ....... ....... .......
....... ....... ....... ....... ....... ....... .......
....... ....... ....... ....... ....... ....... .......
....... ....... ....... ....... ....... ....... .......
....... ....... ....... ....... ....... ....... .......
....... ....... ....... ....... ....... ....... .......
....... ....... ....... ....... ....... ....... .......
....... ....... ....... ....... ....... ....... .......

238     239     240     241     242     243     244
....... ....... ....... ....... ....... ....... .......
....... ....... ....... ....... ....... ....... .......
....... ....... ....... ....... ....... ....... .......
....... ....... ....... ....... ....... ....... .......
....... ....... ....... ....... ....... ....... .......
....... ....... ....... ....... ....... ....... .......
....... ....... ....... ....... ....... ....... .......
....... ....... ....... ....... ....... ....... .......
....... ....... ....... ....... ....... ....... .......
```

```
245      246      247      248      249      250      251
.......  .......  .......  .......  ●●●●●●●  .......  ●.●.●.●
.......  .......  .......  .......  .......  ●●●●●●●  ●.●.●.●
.......  .......  .......  .......  ●●●●●●●  .......  ●.●.●.●
.......  .......  .......  .......  .......  ●●●●●●●  ●.●.●.●
.......  .......  .......  .......  ●●●●●●●  .......  ●.●.●.●
.......  .......  .......  .......  .......  ●●●●●●●  ●.●.●.●
.......  .......  .......  .......  ●●●●●●●  .......  ●.●.●.●
.......  .......  .......  .......  .......  ●●●●●●●  ●.●.●.●
.......  .......  .......  .......  ●●●●●●●  .......  ●.●.●.●

252      253      254      255
.●.●.●.  ●.●.●.●  .●.●.●.  ●......
.●.●.●.  .●.●.●.  ●.●.●.●  ●......
.●.●.●.  ●.●.●.●  .●.●.●.  ●..●...
.●.●.●.  .●.●.●.  ●.●.●.●  ●.●....
.●.●.●.  ●.●.●.●  .●.●.●.  ●●.....
.●.●.●.  .●.●.●.  ●.●.●.●  ●.●....
.●.●.●.  ●.●.●.●  .●.●.●.  ●..●...
.●.●.●.  .●.●.●.  ●.●.●.●  .......
.●.●.●.  ●.●.●.●  .●.●.●.  .......
```

Code Page 866 (Cyrillic)

```
000     001     002     003     004     005     006
.......  .......  .......  .......  .......  ..●●●..  ...●...
.......  .●●●●●.  .●●●●●.  .......  .......  ..●●●..  ..●●●..
.......  ●.....●  ●●●●●●●  .●●.●●.  ...●...  ..●●●..  .●●●●●.
.......  ●.●.●.●  ●●.●.●●  ●●●●●●●  ..●●●..  ●●.●.●●  ●●●●●●●
.......  ●.....●  ●●●●●●●  ●●●●●●●  .●●●●●.  ●●●●●●●  ●●●●●●●
.......  ●.●●●.●  ●●...●●  .●●●●●.  ..●●●..  ●●.●.●●  .●●●●●.
.......  ●..●..●  ●●●.●●●  ..●●●..  ...●...  ...●...  ...●...
.......  .●●●●●.  .●●●●●.  ...●...  .......  ...●...  .●●●●●.
.......  .......  .......  .......  .......  .......  .......

007     008     009     010     011     012     013
.......  ●●●●●●●  .......  ●●●●●●●  .......  .......  .......
.......  ●●●●●●●  .......  ●●●●●●●  ..●●●..  .●●●●●.  ...●●..
.......  ●●●●●●●  ..●●●..  ●●...●●  ...●.●.  ●.....●  ...●●●.
...●...  ●●●.●●●  .●...●.  ●.●●●.●  .●.....  ●.....●  ...●..●
.●●●●●.  ●.....●  .●...●.  ●.●●●.●  .●●●●..  .●●●●●.  ...●...
...●...  ●●●.●●●  .●...●.  ●.●●●.●  ●....●.  ...●...  ...●...
.......  ●●●●●●●  ..●●●..  ●●...●●  ●....●.  ●●●●●●●  ●●●●...
.......  ●●●●●●●  .......  ●●●●●●●  .●●●●..  ...●...  ●●●....
.......  ●●●●●●●  .......  ●●●●●●●  .......  .......  .......

014     015     016     017     018     019     020
.......  .......  .......  .......  .......  .......  .......
..●●●●●  ●..●..●  ●......  ......●  ...●...  ..●.●..  .●●●●●●
..●...●  .●.●.●.  ●●●....  ....●●●  ..●●●..  ..●.●..  ●..●..●
..●●●●●  ..●.●..  ●●●●●..  ..●●●●●  .●●●●●.  ..●.●..  ●..●..●
..●...●  ●●...●●  ●●●●●●●  ●●●●●●●  ...●...  ..●.●..  .●●●..●
..●...●  ..●.●..  ●●●●●..  ..●●●●●  .●●●●●.  .......  ...●..●
●●●.●●●  .●.●.●.  ●●●....  ....●●●  ..●●●..  .......  ...●..●
●●●.●●●  ●..●..●  ●......  ......●  ...●...  ..●.●..  ...●..●
.......  .......  .......  .......  .......  .......  .......

021     022     023     024     025     026     027
.......  .......  ...●...  .......  .......  .......  .......
.●●●●●.  .......  ..●●●..  ...●...  ...●...  .......  .......
●......  .......  .●●●●●.  ..●●●..  ...●...  ....●..  ..●....
.●●●●..  .......  ...●...  .●●●●●.  ...●...  ....●●.  .●●....
●....●.  ●●●●●●●  ...●...  ...●...  ...●...  ●●●●●●●  ●●●●●●●
.●●●●..  ●●●●●●●  .●●●●●.  ...●...  .●●●●●.  ....●●.  .●●....
.....●.  ●●●●●●●  ..●●●..  ...●...  ..●●●..  ....●..  ..●....
●●●●●..  .......  ...●...  ...●...  ...●...  .......  .......
.......  .......  .●●●●●.  .......  .......  .......  .......

028     029     030     031     032     033     034
.......  .......  ...●...  .......  .......  .......  .●●.●●.
.......  .......  ...●...  ●●●●●●●  .......  ...●...  .●●.●●.
●......  .......  ..●●●..  ●●●●●●●  .......  ..●●●..  ..●.●..
●......  .●...●.  ..●●●..  .●●●●●.  .......  ..●●●..  .......
●......  ●●●●●●●  .●●●●●.  .●●●●●.  .......  ...●...  .......
●......  .●...●.  .●●●●●.  ..●●●..  .......  ...●...  .......
●●●●●●●  .......  ●●●●●●●  ..●●●..  .......  .......  .......
.......  .......  ●●●●●●●  ...●...  .......  ...●...  .......
.......  .......  .......  ...●...  .......  .......  .......
```

```
035     036     037     038     039     040     041
.......
..●.●..
..●.●..
●●●●●●●
..●.●..
●●●●●●●
..●.●..
..●.●..
.......

042     043     044     045     046     047     048
.......
.......
.●...●.
..●.●..
●●●●●●●
..●.●..
.●...●.
.......
.......

049     050     051     052     053     054     055
.......
...●...
..●●...
...●...
...●...
...●...
..●●●..
.......

056     057     058     059     060     061     062
.......
.●●●●●.
●.....●
●.....●
.●●●●●.
●.....●
●.....●
.●●●●●.
.......

063     064     065     066     067     068     069
.......
..●●●..
.●...●.
....●..
...●...
...●...
.......
...●...
.......
```

```
070       071       072       073       074       075       076
.......   .......   .......   .......   .......   .......   .......
●●●●●●●   .●●●●●.   ●.....●   .●●●●●.   ....●●●   ●.....●   ●......
●......   ●.....●   ●.....●   ...●...   .....●.   ●....●.   ●......
●......   ●......   ●.....●   ...●...   .....●.   ●...●..   ●......
●●●●●..   ●...●●●   ●●●●●●●   ...●...   .....●.   ●●●....   ●......
●......   ●.....●   ●.....●   ...●...   .....●.   ●...●..   ●......
●......   ●.....●   ●.....●   ...●...   ●....●.   ●....●.   ●......
●......   .●●●●●.   ●.....●   .●●●●●.   .●●●●..   ●.....●   ●●●●●●●
.......   .......   .......   .......   .......   .......   .......
```

```
077       078       079       080       081       082       083
.......   .......   .......   .......   .......   .......   .......
●.....●   ●.....●   .●●●●●.   ●●●●●●.   .●●●●●.   ●●●●●●.   .●●●●●.
●.●.●.●   ●●....●   ●.....●   ●.....●   ●.....●   ●.....●   ●.....●
●..●..●   ●.●...●   ●.....●   ●.....●   ●.....●   ●.....●   ●......
●..●..●   ●..●..●   ●.....●   ●●●●●●.   ●.....●   ●●●●●●.   .●●●●●.
●.....●   ●...●.●   ●.....●   ●......   ●.....●   ●...●..   ......●
●.....●   ●....●●   ●.....●   ●......   ●.●...●   ●....●.   ●.....●
●.....●   ●.....●   .●●●●●.   ●......   .●●●●●.   ●.....●   .●●●●●.
.......   .......   .......   .......   ....●●●   .......   .......
```

```
084       085       086       087       088       089       090
.......   .......   .......   .......   .......   .......   .......
●●●●●●●   ●.....●   ●.....●   ●.....●   ●.....●   ●.....●   ●●●●●●●
...●...   ●.....●   ●.....●   ●.....●   .●...●.   ●.....●   .....●.
...●...   ●.....●   ●.....●   ●.....●   ..●.●..   .●...●.   ....●..
...●...   ●.....●   ●.....●   ●..●..●   ...●...   ..●.●..   ...●...
...●...   ●.....●   .●...●.   ●..●..●   ..●.●..   ...●...   ..●....
...●...   ●.....●   ..●.●..   ●.●.●.●   .●...●.   ...●...   .●.....
...●...   .●●●●●.   ...●...   .●...●.   ●.....●   ...●...   ●●●●●●●
.......   .......   .......   .......   .......   .......   .......
```

```
091       092       093       094       095       096       097
.......   .......   .......   ...●...   .......   ..●●...   .......
..●●●..   .......   ..●●●..   ..●.●..   .......   ..●....   .......
..●....   .●.....   ....●..   .●...●.   .......   ...●...   .......
..●....   ..●....   ....●..   .......   .......   .......   .●●●●..
..●....   ...●...   ....●..   .......   .......   .......   .....●.
..●....   ....●..   ....●..   .......   .......   .......   .●●●●●.
..●....   .....●.   ....●..   .......   .......   .......   ●....●.
..●●●..   ......●   ..●●●..   .......   .......   .......   .●●●●.●
.......   .......   .......   .......   ●●●●●●●   .......   .......
```

```
098       099       100       101       102       103       104
.......   .......   .......   .......   .......   .......   .......
●......   .......   ......●   .......   ...●●●.   .......   ●......
●......   .......   ......●   .......   ..●...●   .......   ●......
●●●●●●.   .●●●●●●   .●●●●●●   .●●●●●.   ..●....   .●●●●●●   ●●●●●●.
●.....●   ●......   ●.....●   ●.....●   .●●●●..   ●.....●   ●.....●
●.....●   ●......   ●.....●   ●●●●●●●   ..●....   ●.....●   ●.....●
●.....●   ●......   ●.....●   ●......   ..●....   .●●●●●●   ●.....●
●●●●●●.   .●●●●●●   .●●●●●●   .●●●●●●   ..●....   ......●   ●.....●
.......   .......   .......   .......   .......   .●●●●●.   .......
```

```
105       106       107       108       109       110       111
.......   .......   .......   .......   .......   .......   .......
...●...   .....●.   .●.....   ...●...   .......   .......   .......
.......   .......   .●.....   ...●...   .......   .......   .......
...●...   .....●.   .●...●.   ...●...   ●●●.●●.   ●.●●●●.   .●●●●●.
...●...   .....●.   .●..●..   ...●...   ●..●..●   .●....●   ●.....●
...●...   .....●.   .●●●...   ...●...   ●..●..●   .●....●   ●.....●
...●...   .....●.   .●..●..   ...●...   ●.....●   .●....●   ●.....●
...●...   .●...●.   .●...●.   ...●...   ●.....●   .●....●   .●●●●●.
.......   ..●●●..   .......   .......   .......   .......   .......

112       113       114       115       116       117       118
.......   .......   .......   .......   .......   .......   .......
.......   .......   .......   .......   ..●....   .......   .......
.......   .......   .......   .......   ..●....   .......   .......
.●●●●●.   .●●●●●.   ●.●●●●.   .●●●●●.   .●●●●..   ●....●.   .●...●.
.●....●   ●....●.   ●●....●   ●......   ..●....   ●....●.   .●...●.
.●....●   ●....●.   ●.....●   .●●●●●.   ..●....   ●....●.   .●...●.
.●●●●●.   .●●●●●.   ●......   ......●   ..●..●.   ●....●.   ..●.●..
.●.....   .....●.   ●......   .●●●●●.   ...●●..   .●●●●.●   ...●...
.●.....   .....●●   .......   .......   .......   .......   .......

119       120       121       122       123       124       125
.......   .......   .......   .......   .......   .......   .......
.......   .......   .......   .......   ....●..   ...●...   ..●....
.......   .......   .......   .......   ...●...   ...●...   ...●...
●.....●   ●.....●   ●.....●   ●●●●●●●   ...●...   ...●...   ...●...
●..●..●   .●...●.   ●.....●   .....●.   .●●....   .......   ....●●.
●..●..●   ...●...   ●.....●   ...●...   ...●...   ...●...   ...●...
●.●.●.●   .●...●.   .●●●●●●   .●.....   ...●...   ...●...   ...●...
.●...●.   ●.....●   .....●.   ●●●●●●●   ....●..   ...●...   ..●....
.......   .......   .●●●●..   .......   .......   .......   .......

126       127       128       129       130       131       132
.●●●..●   .......   .......   .......   .......   .......   ...●●●.
●..●●●.   ...●...   ..●●●..   ●●●●●●●   ●●●●●●.   ●●●●●●●   ..●..●.
.......   .●...●.   .●...●.   .●....●   .●....●   .●....●   .●...●.
.......   ●.....●   ●.....●   .●.....   .●....●   .●.....   .●...●.
.......   ●.....●   ●.....●   .●●●●●.   .●●●●●.   .●.....   .●...●.
.......   ●●●●●●●   ●●●●●●●   .●....●   .●....●   .●.....   .●...●.
.......   .......   ●.....●   .●....●   .●....●   .●.....   ●●●●●●●
.......   .......   ●.....●   ●●●●●●.   ●●●●●●.   ●●●....   ●.....●
.......   .......   .......   .......   .......   .......   ●.....●

133       134       135       136       137       138       139
.......   .......   .......   .......   ..●.●..   .......   .......
●●●●●●●   ●..●..●   .●●●●●.   ●.....●   ...●...   ●●....●   ...●●●●
.●....●   ●..●..●   ●.....●   ●....●●   ●.....●   .●...●.   ..●...●
.●..●..   .●.●.●.   ......●   ●...●.●   ●....●●   .●..●..   .●....●
.●●●●..   ..●●●..   ..●●●●.   ●..●..●   ●...●.●   .●●●...   .●....●
.●..●..   .●.●.●.   ......●   ●.●...●   ●..●..●   .●..●..   .●....●
.●....●   ●..●..●   ●.....●   ●●....●   ●.●...●   .●...●.   .●....●
●●●●●●●   ●..●..●   .●●●●●.   ●.....●   ●●....●   ●●....●   ●.....●
.......   .......   .......   .......   .......   .......   .......
```

```
140     141     142     143     144     145     146
.......  .......  .......  .......  .......  .......  .......
●.....●  ●.....●  .●●●●●.  ●●●●●●●  ●●●●●●.  .●●●●●.  ●●●●●●●
●●...●●  ●.....●  ●.....●  ●.....●  .●....●  ●.....●  ●..●..●
●.●.●.●  ●.....●  ●.....●  ●.....●  .●....●  ●......  ...●...
●..●..●  ●●●●●●●  ●.....●  ●.....●  .●....●  ●......  ...●...
●..●..●  ●.....●  ●.....●  ●.....●  .●●●●●.  ●......  ...●...
●.....●  ●.....●  ●.....●  ●.....●  .●.....  ●.....●  ...●...
●.....●  ●.....●  .●●●●●.  ●.....●  ●●●....  .●●●●●.  ..●●●..
.......  .......  .......  .......  .......  .......  .......

147     148     149     150     151     152     153
.......  .......  .......  ●....●.  .......  .......  .......
●.....●  .●●●●●.  ●.....●  ●....●.  ●.....●  ●..●..●  ●..●..●
●.....●  ●..●..●  .●...●.  ●....●.  ●.....●  ●..●..●  ●..●..●
●.....●  ●..●..●  ..●.●..  ●....●.  ●.....●  ●..●..●  ●..●..●
.●●●●●●  ●..●..●  ...●...  ●....●.  .●●●●●●  ●..●..●  ●..●..●
......●  .●●●●●.  ..●.●..  ●....●.  ......●  ●..●..●  ●..●..●
●.....●  ...●...  .●...●.  ●●●●●●●  ......●  ●..●..●  ●..●..●
.●●●●●.  ..●●●..  ●.....●  ......●  ......●  ●●●●●●●  ●●●●●●●
.......  .......  .......  ......●  .......  .......  ......●

154     155     156     157     158     159     160
.......  .......  .......  .......  .......  .......  .......
●●●....  ●.....●  ●●●....  .●●●●..  ●..●●●.  .●●●●●●  .......
●.●....  ●.....●  .●.....  ●....●.  ●.●...●  ●.....●  .......
..●....  ●.....●  .●.....  ......●  ●.●...●  ●.....●  .●●●●..
..●●●●.  ●●●●..●  .●●●●●.  ..●●●●●  ●●●...●  ●.....●  .....●.
..●...●  ●...●.●  .●....●  ......●  ●.●...●  .●●●●●●  .●●●●●.
..●...●  ●...●.●  .●....●  ●....●.  ●.●...●  ..●...●  ●....●.
..●●●●.  ●●●●..●  .●●●●●.  .●●●●..  ●..●●●.  ●●....●  .●●●●.●
.......  .......  .......  .......  .......  .......  .......

161     162     163     164     165     166     167
.......  .......  .......  .......  .......  .......  .......
.....●●  .......  .......  .......  .......  .......  .......
.●●●●●.  .......  .......  ..●●●●.  .......  .......  .......
●......  ●●●●●●.  ●●●●●●●  .●...●.  .●●●●●.  ●..●..●  .●●●●●.
●●●●●●.  .●....●  .●....●  .●...●.  ●.....●  .●.●.●.  ●.....●
●.....●  .●●●●●.  .●.....  .●...●.  ●●●●●●●  ..●●●..  ...●●●.
●.....●  .●....●  .●.....  ●●●●●●●  ●......  .●.●.●.  ●.....●
.●●●●●.  ●●●●●●.  ●●●....  ●.....●  .●●●●●.  ●..●..●  .●●●●●.
.......  .......  .......  ●.....●  .......  .......  .......

168     169     170     171     172     173     174
.......  .......  .......  .......  .......  .......  .......
.......  .●..●..  .......  .......  .......  .......  .......
.......  ..●●...  .......  .......  .......  .......  .......
●....●.  ●....●.  ●●...●●  ..●●●●●  ●.....●  ●.....●  .●●●●●.
●...●●.  ●...●●.  .●..●..  .●....●  ●●...●●  ●.....●  ●.....●
●..●.●.  ●..●.●.  .●●●...  .●....●  ●.●.●.●  ●●●●●●●  ●.....●
●.●..●.  ●.●..●.  .●..●..  .●....●  ●..●..●  ●.....●  ●.....●
●●...●.  ●●...●.  ●●...●●  ●●....●  ●.....●  ●.....●  .●●●●●.
.......  .......  .......  .......  .......  .......  .......
```

```
175     176     177     178     179     180     181
.......  ..●...●  ●..●..●  .●.●.●.  ...●...  ...●...  ...●...
.......  ●...●..  .●...●.  ●.●.●..  ...●...  ...●...  ...●...
.......  ..●...●  ●..●..●  .●.●.●.  ...●...  ...●...  ●●●●...
●●●●●●●  ●...●..  .●...●.  ●.●.●..  ...●...  ...●...  ...●...
●.....●  ..●...●  ●..●..●  .●.●.●.  ...●...  ●●●●...  ●●●●...
●.....●  ●...●..  .●...●.  ●.●.●..  ...●...  ...●...  ...●...
●.....●  ..●...●  ●..●..●  .●.●.●.  ...●...  ...●...  ...●...
●.....●  ●...●..  .●...●.  ●.●.●..  ...●...  ...●...  ...●...
.......  ..●...●  ●..●..●  .●.●.●.  ...●...  ...●...  ...●...

182     183     184     185     186     187     188
..●.●..  .......  .......  ..●.●..  ..●.●..  .......  ..●.●..
..●.●..  .......  .......  ..●.●..  ..●.●..  .......  ..●.●..
..●.●..  .......  ●●●●...  ●●●.●..  ..●.●..  ●●●●●..  ●●●.●..
..●.●..  .......  ...●...  ....●..  ..●.●..  ....●..  ....●..
●●●.●..  ●●●●●..  ●●●●...  ●●●.●..  ..●.●..  ●●●.●..  ●●●●●..
..●.●..  ..●.●..  ...●...  ..●.●..  ..●.●..  ..●.●..  .......
..●.●..  ..●.●..  ...●...  ..●.●..  ..●.●..  ..●.●..  .......
..●.●..  ..●.●..  ...●...  ..●.●..  ..●.●..  ..●.●..  .......
..●.●..  ..●.●..  ...●...  ..●.●..  ..●.●..  ..●.●..  .......

189     190     191     192     193     194     195
..●.●..  ...●...  .......  ...●...  ...●...  .......  ...●...
..●.●..  ...●...  .......  ...●...  ...●...  .......  ...●...
..●.●..  ●●●●...  .......  ...●...  ...●...  .......  ...●...
..●.●..  ...●...  .......  ...●...  ...●...  .......  ...●...
●●●●●..  ●●●●...  ●●●●...  ...●●●●  ●●●●●●●  ●●●●●●●  ...●●●●
.......  .......  ...●...  .......  .......  ...●...  ...●...
.......  .......  ...●...  .......  .......  ...●...  ...●...
.......  .......  ...●...  .......  .......  ...●...  ...●...
.......  .......  ...●...  .......  .......  ...●...  ...●...

196     197     198     199     200     201     202
.......  ...●...  ...●...  ..●.●..  ..●.●..  .......  ..●.●..
.......  ...●...  ...●...  ..●.●..  ..●.●..  .......  ..●.●..
.......  ...●...  ...●●●●  ..●.●..  ..●.●●●  ..●●●●●  ●●●.●●●
.......  ...●...  ...●...  ..●.●..  ..●....  ..●....  .......
●●●●●●●  ●●●●●●●  ...●●●●  ..●.●●●  ..●●●●●  ..●.●●●  ●●●●●●●
.......  ...●...  ...●...  ..●.●..  .......  ..●.●..  .......
.......  ...●...  ...●...  ..●.●..  .......  ..●.●..  .......
.......  ...●...  ...●...  ..●.●..  .......  ..●.●..  .......
.......  ...●...  ...●...  ..●.●..  .......  ..●.●..  .......

203     204     205     206     207     208     209
.......  ..●.●..  .......  ..●.●..  ...●...  ..●.●..  .......
.......  ..●.●..  .......  ..●.●..  ...●...  ..●.●..  .......
●●●●●●●  ..●.●●●  ●●●●●●●  ●●●.●●●  ●●●●●●●  ..●.●..  ●●●●●●●
.......  ..●....  .......  .......  .......  ..●.●..  .......
●●●.●●●  ..●.●●●  ●●●●●●●  ●●●.●●●  ●●●●●●●  ●●●●●●●  ●●●●●●●
..●.●..  ..●.●..  .......  ..●.●..  .......  .......  ...●...
..●.●..  ..●.●..  .......  ..●.●..  .......  .......  ...●...
..●.●..  ..●.●..  .......  ..●.●..  .......  .......  ...●...
..●.●..  ..●.●..  .......  ..●.●..  .......  .......  ...●...
```

```
210     211     212     213     214     215     216
.......ooo.ooo...o.....ooo.ooo...o...
.......ooo.ooo...o.....ooo.ooo...o...
.......ooo.ooo...ooooooooooooooooooo
.......ooo.ooo...o.....ooo.ooo...o...
ooooooo.ooooo...ooooooooooooooooooooo
..o.o..ooo.ooo...o.....ooo.ooo...o...
..o.o..ooo.ooo...o.....ooo.ooo...o...
..o.o..ooo.ooo...o.....ooo.ooo...o...
..o.o..ooo.ooo...o.....ooo.ooo...o...

217     218     219     220     221     222     223
...o...ooo.ooo...ooooooooooooooooooo
...o...ooo.ooo...ooooooooooooooooooo
...o...ooo.ooo...ooooooooooooooooooo
...o...ooo.ooo...ooooooooooooooooooo
oooo...ooo.ooo...ooooooooooooooooooo
.......ooo.ooo...ooooooooooooooooooo
.......ooo.ooo...ooooooooooooooooooo
.......ooo.ooo...ooooooooooooooooooo
.......ooo.ooo...ooooooooooooooooooo

224     225     226     227     228     229     230
.ooooo..ooo.ooo...ooooooooooooooooooo
.o....o.ooo.ooo...o.....o.ooooo.ooo.o....o.
.o....o.ooo.ooo...o.....o.ooooo.ooo.o....o.
.ooooo.ooo.ooo...o.....o.o..o..o.o...o.o....o.
.o.....ooo.ooo...o.o.o.o.o..o..o..o.o.o..o....o.
.o.....ooo.ooo...o.....o.ooooo.ooo...o.o....o.
.o.....ooo.ooo...o.....o...o...o...o.o.o..ooooooo
ooo....ooo.ooo...o.....o...o...o...o.o...o.o.....o
.......ooo.ooo...o.....o.ooooo.o...o.o...o.o.....o

231     232     233     234     235     236     237
.ooooo..ooo.ooo...ooooooooooooooooooo
.ooooo..ooo.ooo...ooooooooooooooooooo
.ooooo..ooo.ooo...ooooooooooooooooooo
.ooooo..o..o..o...ooo.....o.ooooo.ooo.....o.ooooo.
.ooooo..o..o..o...o.o.....o.ooooo.o.....o.ooooo.
.ooooo..o..o..o...o..o..o..o..oooo.oooo..o.ooooo.o...oooo
.ooooo..o..o..o...o..o..o..o...o.o...o.o.o....o.o.....o
.ooooo..ooooooo...ooooooo..oooo.oooo..o.ooooo.o.ooooo.
.ooooo.....o.....ooooooo.....ooooo.....ooooo.....

238     239     240     241     242     243     244
.ooooo..ooo.ooo...o...o.ooooo.ooo.ooo...o...
.ooooo..ooo.ooo...ooooooooooooooooooo
.ooooo..ooo.ooo...ooooooooooooooooooo
o..ooo.ooooooo...o....o.ooooo.o.....o.ooooo.o...o...
o.o...o.o.....o.oooo..o.....o.ooooo..o.....o...o...
ooo...o.ooooooo.o.....ooooooo.o.....oooo...o...o...
o.o...o..o...o.o.....o.o.....o.o.....o.o.....o...o...
o..ooo.oo....oooooooo.ooooo.o..oooo.o.ooooo.o..ooo..
ooooooooooooooooooooooooooooooooooooo
```

```
245     246     247     248     249     250     251
.......ooooooo  .......ooooooo  .......ooooooo  .......ooooooo  .......ooooooo  .......ooooooo  .......ooooooo
..o.o...ooooooo  ...o...ooooooo  ...o...ooooooo  .o..o...ooooooo  .......ooooooo  .......ooooooo  ....oo.ooooooo
.......o.....o  o.....o  o.....o  .o..o...ooooooo  .......ooooooo  .......ooooooo  ....o...ooooooo
...o...o.....o  o.....o  .o...o.  ..oo....ooooooo  ..oo....ooooooo  .......ooooooo  ....o...ooooooo
...o...oooooo.  ..o.o...ooooooo  .......ooooooo  ..oo....ooooooo  ...o....ooooooo  ....o...ooooooo
...o.....o  ...o....ooooooo  .......ooooooo  .......ooooooo  .......ooooooo  .o..o...ooooooo
...o...o.....o  ..o.....ooooooo  .......ooooooo  .......ooooooo  .......ooooooo  ..o.o...ooooooo
..ooo...ooooo.  .o.....ooooooo  .......ooooooo  .......ooooooo  .......ooooooo  ...oo...ooooooo
.......ooooooo  o.....ooooooo  .......ooooooo  .......ooooooo  .......ooooooo

252     253     254     255
.......ooooooo  .......ooooooo  .......ooooooo  .......ooooooo
o..o....o.....o  .......ooooooo
o..o.o..ooooo.  .oooo...ooooooo
oo.oo.o.o...o.  .oooo...ooooooo
o.oo.o..o...o.  .oooo...ooooooo
o...oooo.ooooo.  .oooo...ooooooo
o..o....o.....o  .......ooooooo
o..o....ooooooo  .......ooooooo
.......ooooooo  .......ooooooo  .......ooooooo  .......ooooooo
```

Reset Display

Format	1B 01
Returns	xx yy zz

- where xx is the Microcontroller status:

  00 = OK

If a failure occurs, testing halts, and the firmware begins executing a loop as described in the Internal Power UP Diagnostics section in the Installation chapter.

- where yy is the External Character PROM status:

  00 = Not present (Always 00 for LCD)

  01 = OK, present

  FF = Failure

- where zz is the number (in hex) of character sets available in the External Character PROM

  00 = 10 (Always 00 for LCD)

Description

This command executes the power-down power-up diagnostic sequence. The communication lines (CTS for serial, BUSY for parallel) are placed in an exception condition (see the *Internal Power UP Diagnostics* section in the *Installation* chapter). The Microcontroller test consists of a check-sum test on the ROM and a write/read test on the RAM. A check-sum test is also performed on the External Character PROM that holds any user-defined characters sets (This does not apply to the LCD).

After executing the command, the three status bytes (see above) are sent to the host, the display screen is cleared, the cursor moves to the 0 position, communication line exception conditions are cleared, and all registers and variables are initialized. Note that the screen is cleared during this command. If a host needs previous data redisplayed, the host must resend the previous data after this command has completed.

Erase Display

Format	1B 02

Description

This command clears all of the displayed characters by writing a space to each display position. A space is defined as character 0x20 of the current character set. The cursor moves to the 0 position.

Set Diagnostic State On

Format	1B 04

Description

This state is exclusive from the On and Low Power States. This command causes the firmware to display the current firmware part number of the device for five seconds, and then step through each installed 256-character set (default and user-defined) displaying one character at a time on all 40 display positions at a rate of about one character per second. The firmware starts with the currently selected character set, and then displays all of the characters from the other sets the same way. This continues until one of the other state commands is performed. Prior display data is saved and can be restored before sending the Set Display State On.

Note: The LCD only has one character set.

Set Display State On

Format	1B 05

Description

This state is used for normal run-time conditions. This operation instructs the firmware to leave one of the other states and begin performing normal refresh operations. There may be a slight delay before the Vacuum Fluorescent Display (VFD) reaches the specified brightness setting when exiting the Low Power State. This delay should not exceed 1 second from the time the command is received until the time the VFD reaches the specified brightness.

The Screen Save feature may be in force during the Display On state. This means that after about five minutes of no new display activity, the Screen Save feature could take over and cause the display to go blank or begin walking from right to left.

Set Low Power State On

Format	1B 06

Description

This state is used to reduce Retail Display power consumption and extend the life of the Retail Display VFD. Power is removed from the display, but the Retail Display controller is still fully operational and continues to accept commands. This command causes the firmware to blank or turn off the Retail Display. Display data can be processed while the display is in the Low Power State, but it does not appear until the Low Power State is changed. The displayed characters are preserved so that upon leaving the Low Power State, the display is restored. To leave the Low Power State, one of the other state commands must be received. This is the default state for the Retail Display after power-up.

Enable Cursor

Format	1B 07

Description

This command causes a flashing cursor to be used whenever the Display On state is in force. When the cursor is enabled, the cursor is visible and flashing at the current cursor position. The flashing cursor should be visible for 1 second and then the character at the cursor position should be visible for 1 second. The effect is to alternate between the character and the cursor. The cursor is defined as character 0X5F of whatever character set is currently chosen. For the three supported character sets, the cursor is the bottom row of pixels turned on. For a user-defined character set, the cursor is whatever is defined as character 0X5F of the character set. When the cursor is enabled, it overwrites the character at the cursor position. If the cursor is disabled, the character at the cursor position is left visible.

Note: **Note:** The cursor on the LCD blinks on and off every .5 second. The cursor displays concurrently with whatever character may already be displayed at the cursor position.

Disable Cursor

Format	1B 08

Description

This command causes the cursor to be turned off. This is the default state for the cursor after power-up.

Chapter 10: Graphical VFD Customer Display Interface

Host/Retail Display Command Interface

The Graphical VFD Customer Display accepts two types of data: display data and command data. If a byte received from the host is any character between 0x20 to 0xFF or a double byte character code, it is processed as a character and will be displayed on the Graphical VFD Customer Display. If the following characters are received, the subsequent byte(s) is processed as a command:

- Back Space (0x08)
- Horizontal Tab (0x09)
- Line Feed (0x0A)
- Home Position (0x0B)
- Display Clear (0x0C)
- Carriage Return (0x0D)
- ESC (0x1B)
- Unit Separator (0x1F)

If the subsequent byte is an invalid command, it will be ignored. Note that each command consists of at least two bytes. The first byte (0x1B) or (0x1F) is a command identifier indicating the next byte(s) is a command byte. The command byte may be followed by parameter or data bytes depending on the command.

Retail Display Commands

The following table describes the Graphical VFD Customer Display commands supported:

Command	Function
08	**Backspace** – The cursor moves to left by one character.
09	**Horizontal Tab** – The cursor moves to right by one character.
0A	**Line Feed** – The cursor moves to one lower line.
0B	**Home** – The cursor moves to the home position.
0C	**Clear Display** – The display screen is cleared and the cursor moves to home position.
0D	**Carriage Return** – The cursor moves to left end of same line.
1F 43	Select cursor ON or OFF.
1B 40	Initialize Display. Return to default.
1F 28 67 01	Font size select for Single Byte characters.
1F 28 68 02	Enable/Disable Double Byte character mode.
1F 28 67 0F	Select Double Byte Code Page.
1B 52	Select Single Byte International Font set.
1B 74	Select Single Byte Code Page.
1F 02	Scrolls cursor up 1 line.
1F 03	Scrolls cursor horizontally 1 space.
1F 01	Overwrite mode.
1B 58	Brightness level adjustment of whole display screen.

Backspace

Format	08

Description

This command moves the cursor to the left by one character.

Horizontal Tab

Format	09

Description

This command moves the cursor to the right by one character.

Line Feed

Format	0A

Description

This command moves the cursor to the lower line.

Home

Format	08

Description

This command moves the cursor to the home position.

Clear Display

Format	0C

Description

This command clears the display screen and moves the cursor to the home position.

Carriage Return

Format	0D

Description

This command moves the cursor to the left end of the same line.

Enable/Disable Cursor

Format	1F 43 nn

Where:

nn = Display cursor ON/OFF

nn = 00: Cursor OFF

nn = 01: Cursor ON

Default:

nn = 00

Description

This command causes a flashing cursor to be used whenever the Display On state is in force. The cursor is displayed by a 1x8 dots (vertical).

Initialize Display

Format	1B 40

Description

This command returns the VFD module into its default status. All configurations made to the VFD module will return to its default settings. Codepage will default back to CP 437 at 5x7 dot pixels.

Set Font Size

Format	1F 28 67 01 nn

Where:

nn = Font size

nn = 01, 5x7 dot character

nn = 01: 8x16 dot character

Default:

nn = 01

Description

This command toggles between a 5x7 dot character and 8x16 dot character. This command is also required to enable the 16x16 dot double byte character mode.

It is recommended that before sending a displayable character, this command must be sent first.

Enable/Disable Double Byte Character Mode

Format	1F 28 67 02 nn

Where:

nn = Enable/disable double byte mode

nn = 00, Disable double byte character mode

nn = 01, Enable double byte character mode

Default:

nn = 00

Description

This command sets the display to Double Byte character mode.

Note: The command **1F 28 67 01 02** (set font to 8x16 mode) is required before sending the Double Byte Mode Enable Command. This is followed by the Double Byte Code Page. Select **1F28 67 0F n** to select the desired code page.

Example:

Select the font size: 1F 28 67 01 02

Enable Double Byte Mode: 1F 28 67 02 01

Select Double Byte Code Page: 1Fh 28h 67h 0Fh 02h

Send Double Byte Character: B0 A2 (double byte character code)

Double Byte Code Page Select

Format	1F 28 67 0F nn

Where:

nn = Double byte character code page font

nn = 00, Japanese JISX0208 (Shift JIS)

nn = 01, Korean (KSC5601-87)

nn = 02, Simplified Chinese (GB2312-80)

nn = 03, Traditional Chinese (Big-5)

Default:

nn = 01

Description

This command selects the Double Byte Code Page. This command requires the Set font size 1F 28 67 01 02 command & Enable double byte character mode 1F 28 67 02 01.

Example:

Select the font size: 1F 28 67 01 02

Enable Double Byte Mode: 1F 28 67 02 01

Select Double Byte Code Page: 1Fh 28h 67h 0Fh 02h

Send Double Byte Character: B0 A2

Single Byte International Code Page Select

Format	1B 52 nn

Where:

nn = International Font Set

nn = 00, America

nn = 01, France

nn = 02, Germany

nn = 03, England

nn = 04, Denmark 1

nn = 05, Sweden

nn = 06, Italy

nn = 07, Spain 1

nn = 08, Japan

nn = 09, Norway

nn = 10, Denmark 2

nn = 11, Spain 2

nn = 12, Latin America

nn = 13, Korea

Default:

nn = 00

Description

This command loads and modifies the International Code Page 437 into a territory specific code page. This command is only applicable for International Code Page and is not the same as the Code Page Select function 1B 74 n.

Single Byte Code Page Select

Format	1b 74 nn

Where:

nn = Code Page Select

nn = 00, CP437(USA – Euro std)

nn = 01, Katakana – Japanese

nn = 02, CP850 (Multilingual)

nn = 03, CP860 (Portuguese)

nn = 04, CP863 (Canadian-French)

nn = 05, CP865 (Nordic)

nn = 16, CP1252 (Latin 1)

nn = 17, CP866 (Cyrillic)

nn = 18, CP852 (Latin 2)

nn = 19, CP858 (International)

Default:

nn = 00

Description

This command loads the selected code page stored in the VFD module.

Vertical Scroll

Format	IF 02

Description

This command scrolls the cursor up by 1 line. Characters will move up 1 line once the display is filled with the 128 characters (for 8x16 mode). All impending characters sent to the VFD display will start at the last line of the display.

The Command 1F 01 will be used to revert the scrolling back to the default Overwrite Mode.

Horizontal Scroll

Format	1F 03

Description

This command scrolls the characters from right to left. The position of the cursor determines the line where the characters will scroll. The characters above or below the current cursor position are not affected.

Once this command is activated, all impending characters will be in horizontal scroll mode unless it is cancelled by the Overwrite Mode 1F 01.

Overwrite Mode

Format	1F 01

Description

This is the default mode of the VFD Display. This command overwrites, or replaces the existing characters of the VFD Display once the display is filled with all the 128 characters (for 8x16). Once all 128 is filled, all impending characters will start back at position zero and continues to write forward.

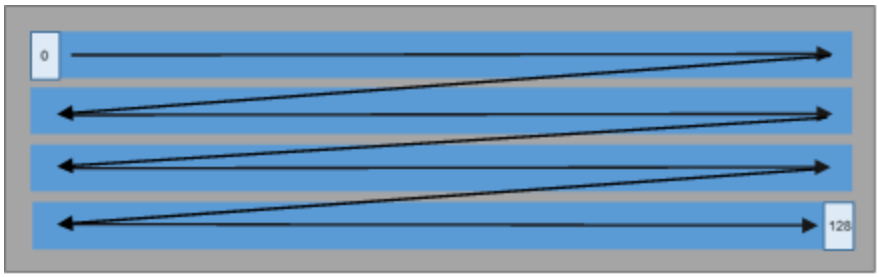

Brightness Level Adjustment

Format	1F 58 nn

Where:

nn = Brightness level setting

nn = 01, 12.5%

nn = 02, 25%

nn = 03, 37.5%

nn = 04, 50%

nn = 05, 62.5%

nn = 06, 75%

nn = 07, 87.5%

nn = 08, 100%

Default:

nn = 08

Description

Adjusts the brightness of the entire display. Individual characters or display positions will not be adjusted.

Character Sets

The Graphical VFD Customer Display is pre-installed with 13 character sets.

Single Byte Character Sets

- CP437 (International)
- Katakana
- CP850 (Multilingual)
- CP860 (Portuguese)
- CP863 (Canadian French)
- P865 (Nordic)
- CP1252 (Latin)
- CP866 (Cyrillic)
- CP852 (Latin 2)
- CP858 (International)

Double Byte Character Sets

- JIS X0208 (Shift JIS, Japanese)
- KSC5601-87 (Korean)
- GB2312-80 (Simplified Chinese)
- Big-5 (Traditional Chinese)

Code Pages

Code Page	Code Type	First Byte	Second Byte
Japanese	JIS X0208(SHIFT-JIS)	81h≦C1≦9Fh E0h≦C1≦EFh	40h≦C2≦7Eh 80h≦C2≦FCh
Korean	KSC5601-87	A1h≦C1≦FEh	A1h≦C2≦FEh
Simplified Chinese	GB2312-80	A1h≦C1≦FEh	A1h≦C2≦FEh
Traditional Chinese	Big-5	A1h≦C1≦FEh	40H≦C2≦7EH, A1H≦C2≦FEH

Appendix A: Wireless Adapter Switching

Wireless Adapter Switching is a feature that disables the wireless adapter when a wired Ethernet connection is present.

The latest NCR OS Images include the driver (Version 17.1.0, or later), but is not pre-installed. The driver can be installed from the `\Install\drivers\wireless` directory.

If the driver is not present on your system you can obtain it from NCR.

https://www.ncr.com/

1. At this site, select the **Support** tab.
2. Select **Drivers and Patches** >> **Retail Support Files** >> **NCR RealPOS and SelfServ Terminal and Operating Systems** >> **NCR RealPOS XR5**
3. Click the **Email Us!** box.

   If you have purchased an XR7 (7702) OS Feature you can Email Us! to request the latest drivers.

4. Provide your name, company, OS version, Email address, and which driver you need in the email window.

Installing the Software and Driver

1. Run the Intel .exe self-extracting executable.
   - Windows 7 32-bit: Wireless_17.x.x_s32.exe

   or
   - Windows 7 64-bit: Wireless_17.x.x_s64.exe
2. Agree to the EULA and choose **Customize**.

3. Check both **Intel Proset/Wireless Enterprise** and **Administrator Toolkit**. Clear check box for **Intel My WiFi Technology**. Click **Install**.

Installation takes several minutes (progress bar shown on-screen).

4. After the installation is complete, click **Start** >> **Wireless Administrator Tool**.
5. Enter the **Administrator Tool Password** (not the Windows Administrator password). You are prompted to create a password if this is the first time using the tool. The password cannot be blank.

6. Select **Create a new package** >> **OK**.

7. Select the **Application Settings** tab.
8. Select **Include Application Settings in this package**.
9. Select **Adapter Switching**
10. **Check Enable Adapter Switching**.
11. Click **Close**

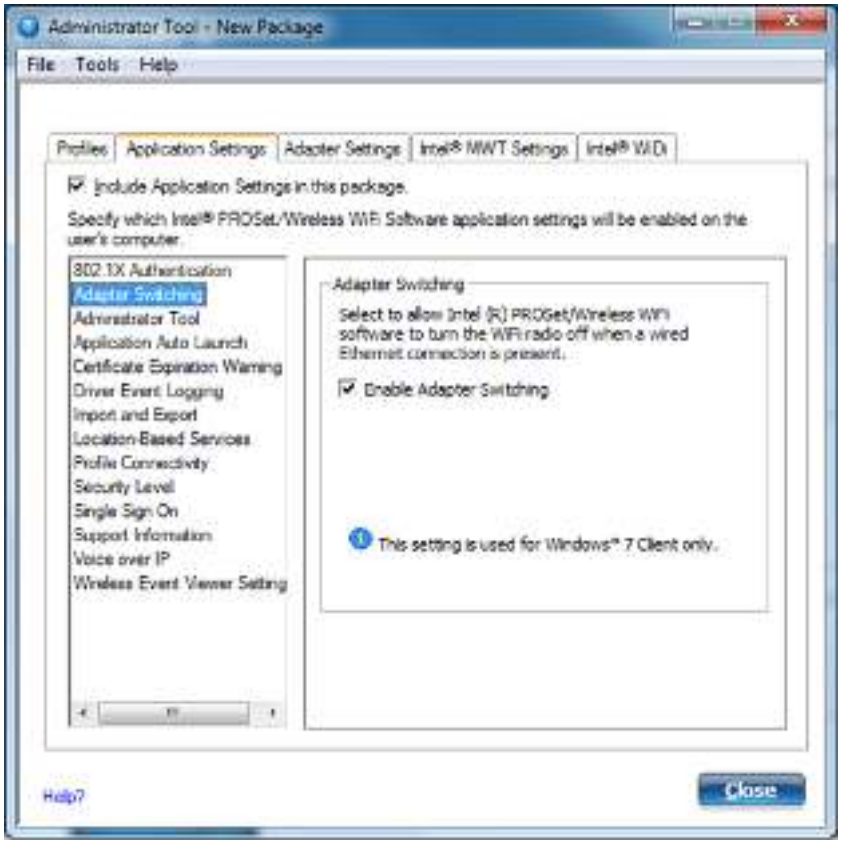

12. Click **Yes**.

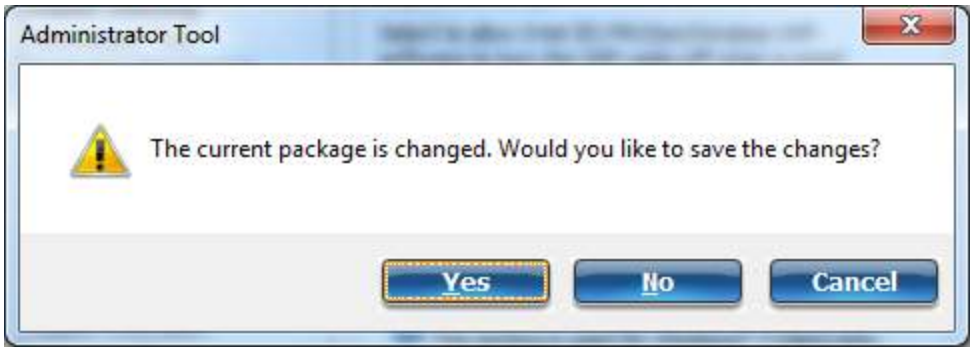

13. Enter a **filename** and choose a **location** to save the package file.

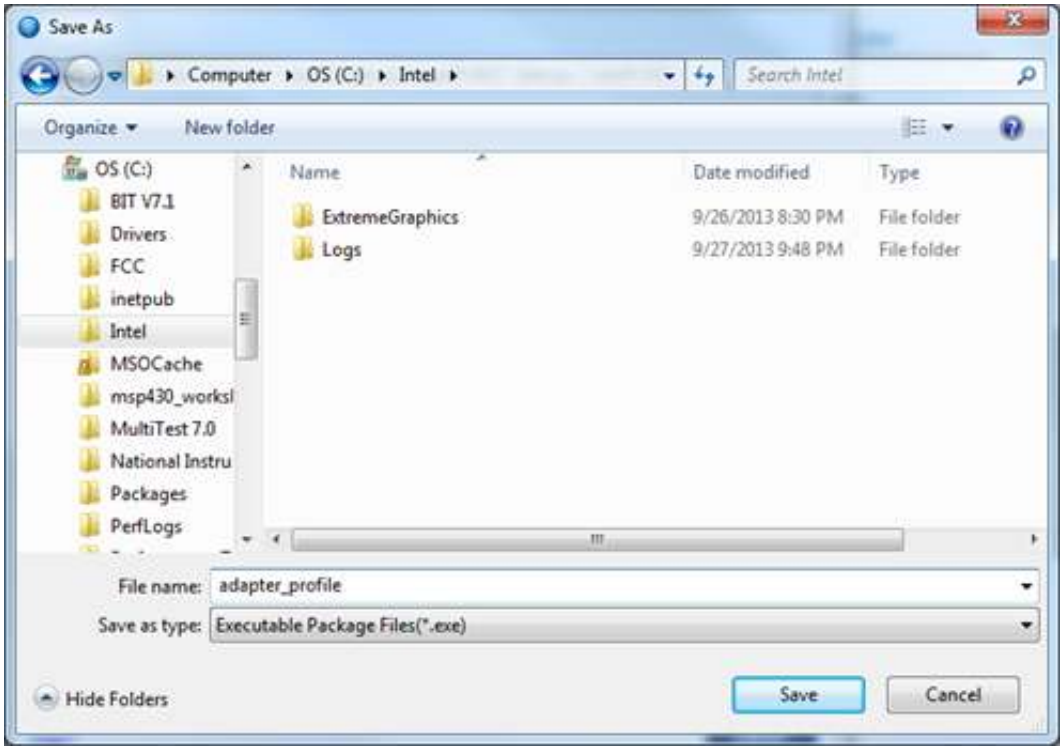

14. Click **Finish** after the save operation completes.

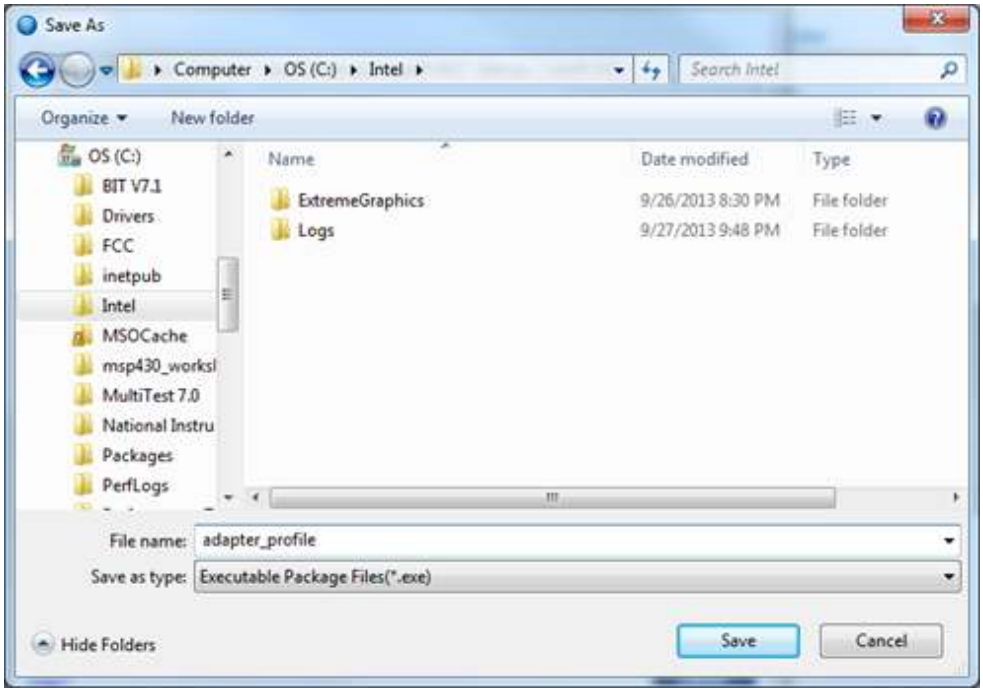

15. Click **Apply this package to this computer**.

Note: You can open and apply the saved package file on other computers that have the Administrator Toolkit installed.

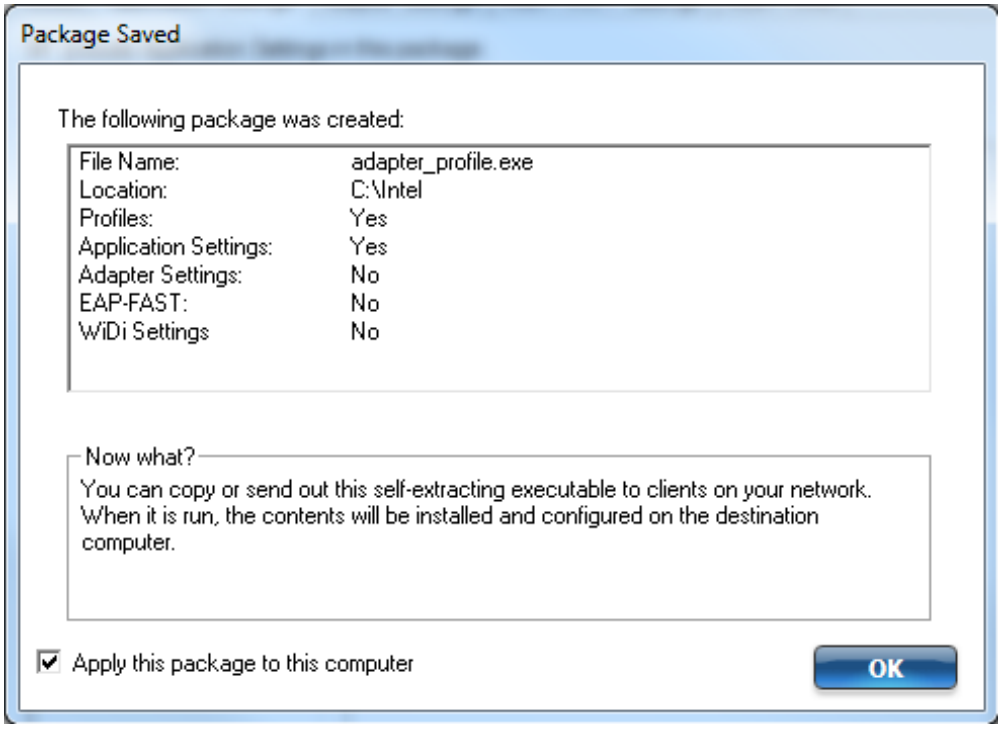

When connecting and disconnecting the wired LAN cable you should now see system tray icons, indicating Proset disabling and enabling the wireless adapter.

Appendix B: Touch Screen Calibration

Note: Only units with resistive touch screens need to be calibrated.

Caution: PCap displays do not require calibration.

Proper Touch Screen Methods

Before performing the calibration procedure please observe the following guidelines for proper/improper methods of touching the screen.

- Face the monitor directly.
- Perform the calibration in the position (sitting or standing) that you normally expect to use the touch screen.
- Touch the calibration target firmly and precisely with your fingertip. During calibration, be careful to keep your fingernails and other fingers away from the touch screen as you touch each target.

- The hand and calibration finger should be perpendicular (straight up) from the touch-screen during touch down and removal of the calibration finger. Keep the other fingers closed and away from the touch-screen.

- Do NOT touch the bezel with your other fingers.

Calibrating the Touch Screen

Resistive Touch Screen Calibration

1. Run the calibration program.
   a. Open Windows Explorer.
   b. Navigate to the calibration program.

      C: >> **Install** >> **Touch** >> **Drivers** >> **Resistive Touch Calibartion**
2. Touch the center of the cross-hair target. When the target is touched, it disappears and another target appears.

3. Repeat the procedure for each target as they appear.

PCap Touch Screen Calibration

PCap touch displays rarely need to be re-calibrated. However, if the need should arise use the following procedure.

1. Run the calibration program.

   Start >> **Programs** >> **UPDD** >> **Calibrate**

2. Touch the center of the cross-hair target. When the target is touched, it switches to a green check mark.
3. Repeat the prodedure for each target as they appear.

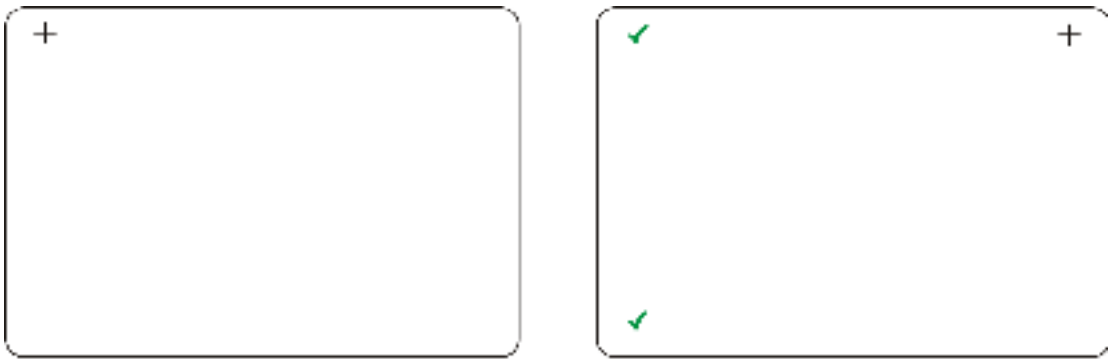

Appendix C: Touchscreen Drivers

Touchbase Driver

The Touch Base driver is installed on all NCR POSReady 2009 and Linux OS disk images. The driver is not required on Win7 systems and is not installed. However, the install package is available on the Win7 images.

When the Touch Base Driver is Required

The Touch Base Driver is required for all POSReady 2009 and Linux systems.

The driver is not required on Win7 systems because it contains most of the needed touch functionality. Features not supported are:

- Beep On Touch
- Touch Down Only
- Lift Off Only
- Edge Acceleration

The Touch Base driver is also required if you have a Win7 system with a *resistive secondary* display (the touch type of the primary display does not matter).

Driver Installation

The Touch Base install package is included on the Win7 NCR disk image at the following location.

`c:\Install\Drivers\Touch\`

Run the *.exe file to install the driver.

3rd Party Touch

UPDD

From the gold image select touch in Drivers

Run as Admin

Install UPDD

UPDD Settings

Select "Click Mode" >> Sound Options>> Enable System Sound

Install eGlax Driver

Select install>>Drivers>>Touch>>eGalax>>Setup

Install eGalax>>Uncheck>>No Calibration